Chapter 12

EXISTING HLM FACILITIES FOR EXPERIMENTAL APPLICATIONS*

12.1 Introduction

The use of the heavy liquid metals (HLM) lead-bismuth eutectic (LBE) and lead (Pb), as cooling medium and spallation material has been envisaged in the field of accelerator-driven systems (ADS), which are devoted to transmute and reduce the radiotoxicity of nuclear waste. An increasing interest on HLM can be identified also in other research and industrial fields, as for instance the energy production with advanced nuclear systems, the hydrogen production with nuclear power and the development of spallation neutron sources for medical applications and materials studies. Therefore, scientific and technological activities focused on materials compatibility, thermal fluid dynamics characterisation and technology issues have been launched. In this frame a large effort has been made to built and operate HLM test facilities in support to the previously mentioned applications. In the following paragraphs the descriptions of the HLM facilities available at the laboratories of the expert groups participating to the realisation of this handbook are given. A list of the facilities is given also in Table 12.1 at the end of this chapter.

The available facilities covers almost all basic studies needed to design HLM nuclear systems working at temperatures up to 550°C. However, further needs can be envisaged for applications at temperature ranges above 600°C and for specific analysis concerning safety aspects in representative conditions (i.e. interaction with secondary coolants, loss of coolant, etc.), specific component testing in prototypical conditions (i.e. dedicated heat exchanger, pump, etc.) and in-service inspection and repair (ISI&R).

In addition the need to characterise and validate for the reactor applications specific measurement techniques (e.g. oxygen sensors) and operational techniques (e.g. pumps, flow meters) in a combined neutron field and HLM environment can be also envisaged.

In the sections that follow the available facilities are listed, and the objectives and the operational parameters are reported. As can be seen, some facilities have been built to provide data for the three fields of investigation previously mentioned.

12.2 Technological facilities and their applications

Technological and liquid metal chemistry, experiments performed in this field are aimed at the development of measurement tools and device to realise and execute thermal-hydraulics benchmark experiments with well known and measurable initial and boundary conditions. Moreover, these facilities are aimed to validate specific procedures for large circuit operation. The relevant measurement tools and devices to be applied for thermal-hydraulics experiments are:

---

* *Chapter lead: Concetta Fazio (FZK, Germany).*

- heat flux simulation tools;
- flow meter devices;
- pressure measuring systems;
- local velocity measurement systems;
- development of tools to measure locally and globally free surfaces.

A second item is the study of liquid metal chemistry, where the development and validation oxygen monitoring and control systems is one of the most important task. Three types of oxygen control methods are currently analysed, which make use of a mixture of hydrogen/moisture; oxygen and hydrogen gases and PbO pellets respectively. Concerning the measurement of the oxygen content in the liquid metal, electrochemical oxygen probes are presently developed. Activities are focused on the definition of a standardised calibration procedure to assess the probes for reliability in conformity to nuclear use. Key variables include dose, dose rate, thermal transients, pressure variations, etc.

Facility*: Technologies of heavy liquid metal systems (THESYS) loop – *Figure 12.2.1

FZK, Germany

Objectives:

- Optimisation of Karlsruhe OCS for loop applications.
- Development of thermal-hydraulic measurement techniques.
- Heat transfer and turbulence experiments.
- Development of high performance INCONEL heaters (fuel rod simulator).
- Set-up of thermal-hydraulic data base for physical model development and code validation.

Operational parameters:

- Maximum temperature: 550°C.
- Maximum flow rate: 3.5 m^3/h.
- LBE volume: 100 l.
- The loop was operated originally with LBE, but it is presently under modification to enable the use of Pb. The relevant of the loop are:

Facility:* Karlsruhe Oxygen Control System (KOCOS) – *Figure 12.2.2

FZK, Germany

Objectives:

- Development of the Karlsruhe Oxygen Control System OCS.
- Measurement of diffusion coefficients of oxygen in Pb-Bi.
- Measurement of oxygen mass exchange rates.

Facility:* Karlsruhe Oxygen Sensor in Molten Alloys (KOSIMA) – *Figure 12.2.3

FZK, Germany

Objectives:

- Development of oxygen sensors.
- Optimisation of oxygen sensor performance as for reference system, reproducibility and long-term stability.
- Calibration of oxygen sensors.

Figure 12.2.1. Scheme and photo of THESYS

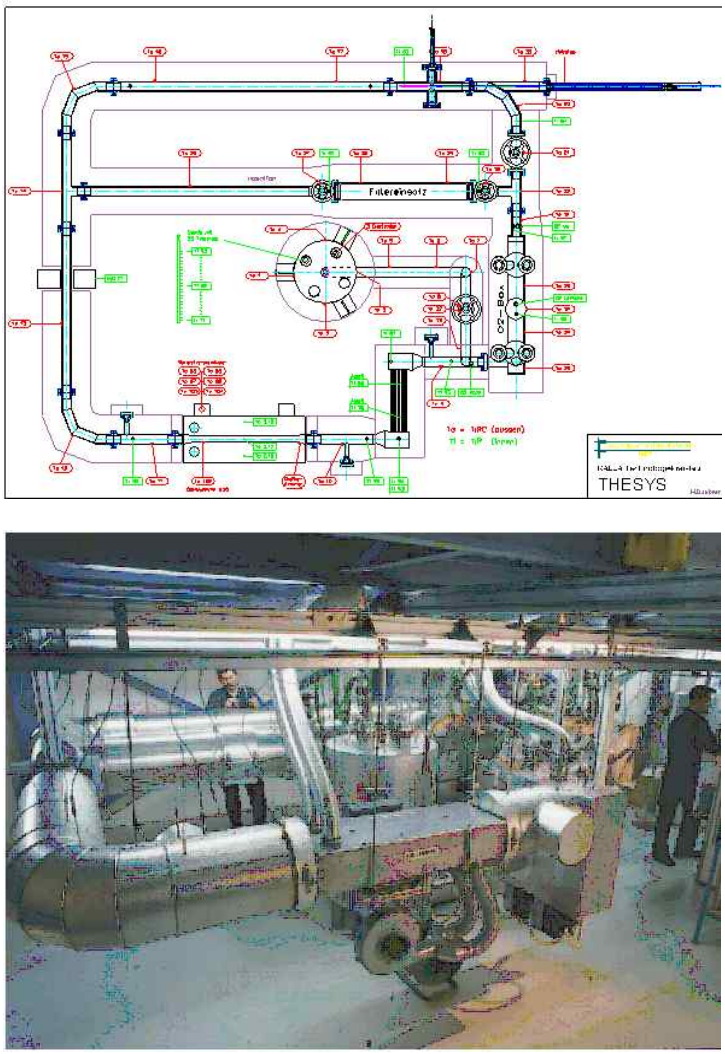

Figure 12.2.2. Diagrammatic sketch of KOCOS experiment

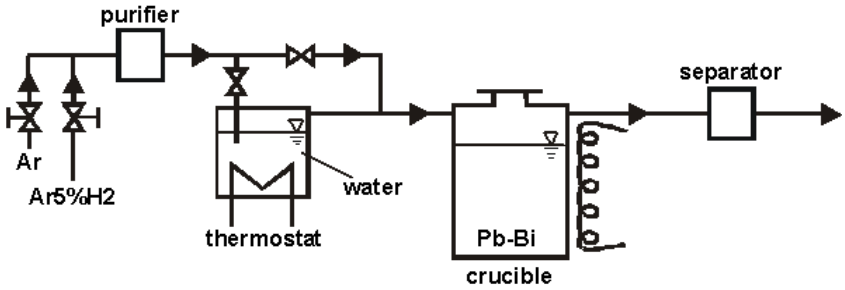

Figure 12.2.3. Diagrammatic sketch of KOSIMA experiment

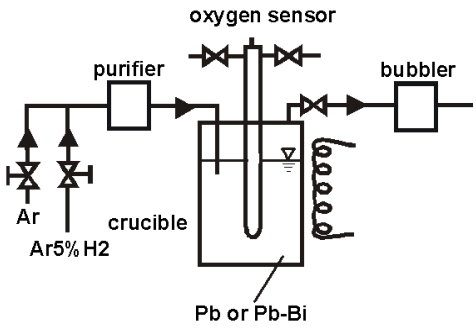

Facility: **Chemistry and Operation (CHEOPE) –** ***Figure 12.2.4***

ENEA, Italy

The device consists of three different loops:

- CHEOPE I for thermal-hydraulic activities.
- CHEOPE II for liquid metal chemistry studies.
- CHEOPE III for corrosion studies at high oxygen content.

Objectives:

- Corrosion investigation in lead alloys at high oxygen content.
- Component test and development.
- Physico-chemistry.
- Thermal-hydraulic experiments: heat transfer characteristics, target development, pumping systems, etc.

Operational parameters:

- Maximum temperature (Cheope III): 500°C.
- Maximum flow rate (Cheope III): 1.2 m³/h.
- Volume Cheope I: 900 l.
- Volume Cheope II: 50 l.
- Volume Cheope III: 50 l.
- Oxygen meter: Yes.
- Oxygen control: Yes.
- Heavy liquid metal: Pb-Bi.

Facility: **SOLDIF –** ***Figure 12.2.5***

CEA, France

Objectives:

- Determination of solubility and diffusivity of dissolved species in molten lead or lead alloys by means of electrochemical techniques using a molten salt electrolyte.
- Characterisation of the oxide layer on a metallic material immersed in molten lead or lead alloys by means of electrochemical techniques.

Operational parameters:

- Maximum temperature: 500°C.
- Maximum flow rate: Static.
- Number of electrochemical cell: One.
- Heavy liquid metal: Pb-Bi or Pb.

Figure 12.2.4. Scheme and photograph of CHEOPE

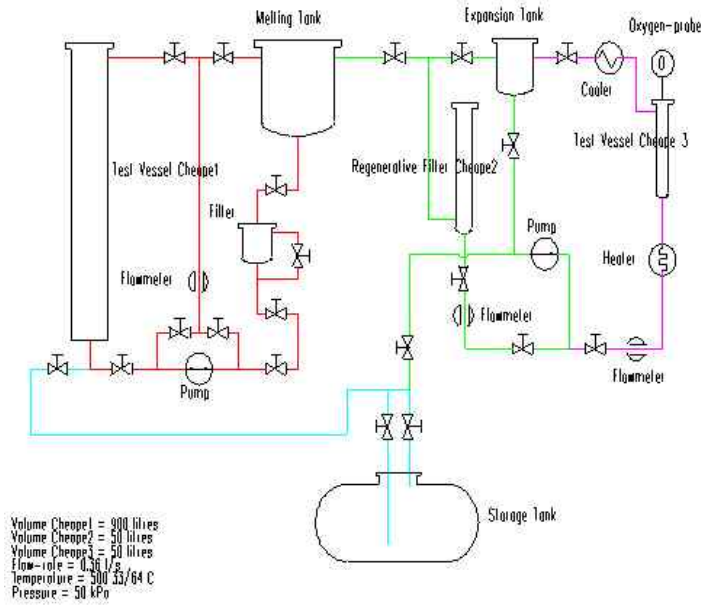

Figure 12.2.5. Scheme and photograph of SOLDIF

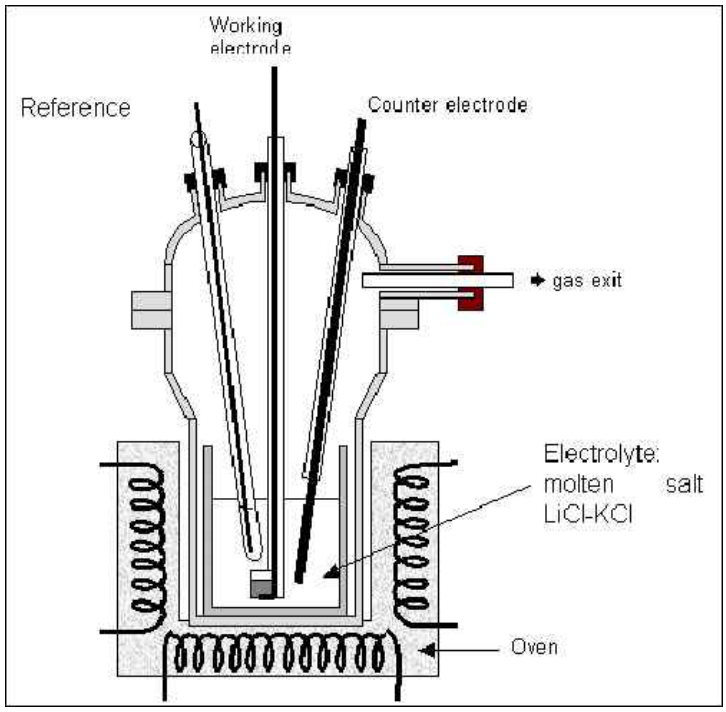

Facility: Standard Technology Loop for Lead Alloy (STELLA) – *Figure 12.2.6*

CEA, France

Objectives:

- Lead alloys chemistry monitoring and control.
- Oxygen sensors validation.
- Purification process development and qualification.
- Oxygen control process development and qualification based on mass exchange unit (PbO).
- Dip sampling system qualification on loop.

Operational parameters:

- Maximum temperature: 550°C.
- Temperature gradient: 150°C max.
- Volume: 32 litres.
- Max flow rate: 1 m^3/h at 3 m NPSH.
- Number of test sections: 1.
- Oxygen control system (OCS): Yes.
- Heavy liquid metal: Pb-Bi.
- Corrosion protection: Aluminisation by pack cementation.

Facility: Vacuum Interface Compatibility Experiment (VICE)

SCK•CEN, Belgium

Objectives:

- Study of gas transport in the proton beam line and possible compound formation in a realistic 1-1 pumping geometry mock-up.
- Detailed investigation of initial and long-term out-gassing of Pb-Bi including component identification.
- Study of metal evaporation.
- Simulation of emanation behaviour of volatile spallation products.

Operational parameters:

- Beam-line geometry (5 m).
- Maximum temperature: 500°C.
- Minimum operating pressure: 10^{-7} mbar – UHV technique.
- Heavy liquid metal: Pb-Bi.
- Useful Pb-load: 100 kg.
- Vacuum pressure controller: 10^{-7} mbar – 1 bar.
- High resolution rest gas analyser.
- Gas flow rate differential calibration system.
- Magneto-hydrodynamic stirring.
- Plasma cleaning system (10 kW).

Figure 12.2.6. Scheme and photograph of STELLA

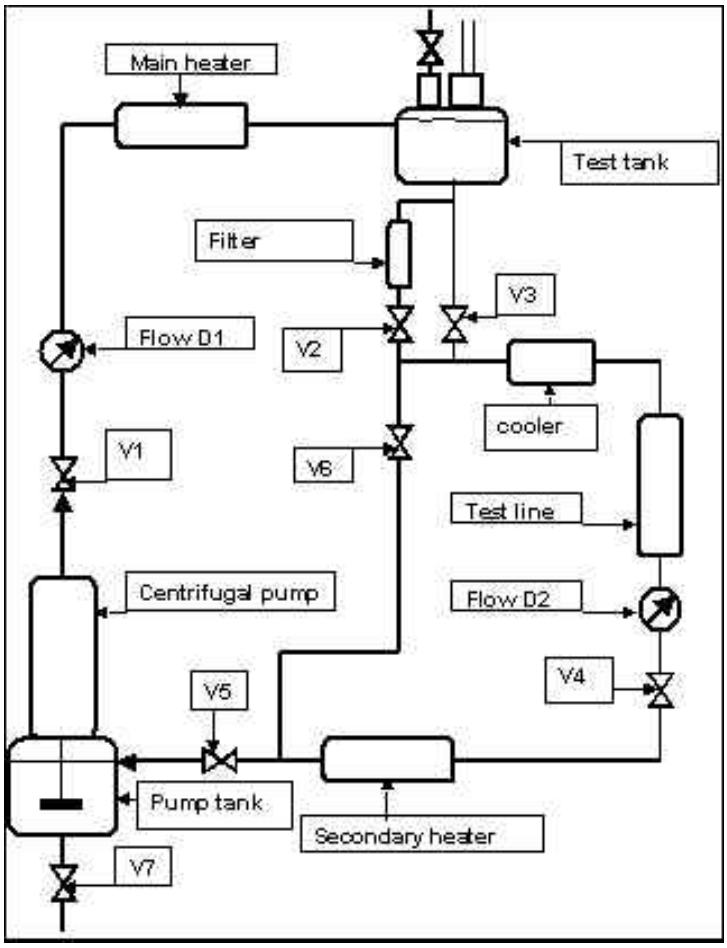

Facility: Pre-conditioning Vessel (PCV) – *Figure 12.2.7*

SCK•CEN, Belgium

Objectives:

- Investigation of conditioning and cleaning procedures of Pb-Bi eutectic to a suitable level for use in a windowless spallation target loop.
- Outgassing studies of Pb-Bi eutectic (stage 1).

Operational parameters:

- Maximum temperature: 500°C.
- Maximum pressure: 10 bar.
- Minimum operating pressure: 10^{-7} mbar – UHV technique.
- Heavy liquid metal: Pb-Bi.
- Useful Pb-load: 100 kg.
- Oxygen control system: H_2/H_2O gas.
- Plasma cleaning system: 10 kW.
- Rest gas analyser : Hi-tech quadrupole.
- Magneto-hydrodynamic stirring.

Facility: Target Complex 1 (TC-1) – *Figure 12.2.8*

University of Nevada, Las Vegas, USA

Objectives:

- Demonstrate long-term, sustained operation of MHD pump for LBE loop.
- Complete prototype evaluation for TC-1 complex on behalf of ISTC partners.
- Train students in the operation of molten metal engineering scale systems.
- Examine long-term performance of target systems under non-irradiation conditions.

Operational parameters:

- Maximum temperature: TBD (not to exceed 300°C at pump inlet).
- Minimum temperature: 200°C.
- Maximum (typical) flow rate: 15 (TBD) m^3/hr.
- Electrical power: TBD (70 kW max.).
- Number of test sections: 0.
- Number of samples: 0.
- Oxygen control system (OCS): None.
- Oxygen sensors: None.
- Heavy liquid metal: Pb-Bi.

Figure 12.2.7. Photograph of inside PCV

Figure 12.2.8. Schematic/components arrangement of TC-1

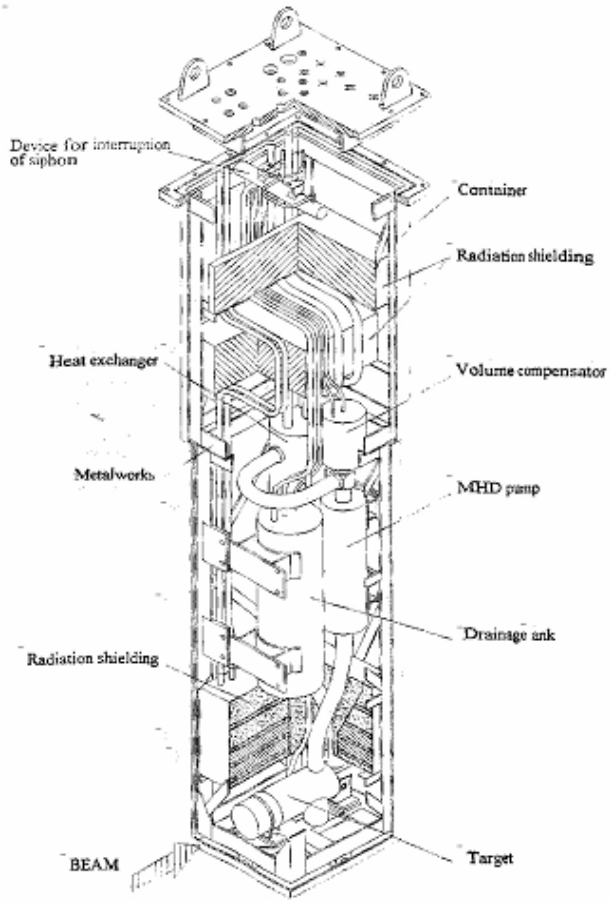

Facility: **Steam Injection and Oxygen Concentration Control Apparatus –** ***Figure 12.2.9***

Research Laboratory for Nuclear Reactors, Tokyo Institute of Technology, Japan

Objectives:

- Performance of oxygen sensor.
- Control of oxygen potentials in Pb-Bi.
- Material corrosion and corrosion product in Pb-Bi.
- Carry-over of Pb-Bi mist and impurities into steam flow.
- Dissolved H_2 in steam and water.
- Chemistry and transport of metal elements in Pb-Bi.

Operational parameters:

- Maximum temperature: 500°C.
- Maximum pressure: 0.5 MPa.
- Pb-Bi inventory: 70 kg.
- Water/steam inventory: 30 kg.
- Maximum water/steam flow rate: 25 g/min., 250°C.
- Pb-Bi flow system: Steam gas lift pump.
- Maximum electrical power Pb-Bi: 6 KW.
  Maximum electrical power water/steam: 4 KW.
- Pb-Bi test vessel number: 1.
  Size: $\phi 260 \times 760$ mm.
  Material: Cr-Mo steel.
- Maximum apparatus height: 3.2 m.
- Oxygen control system (OCS): Yes (hydrogen-dissolved water).
- Heavy liquid metal: Pb-Bi eutectic.

Figure 12.2.9. Flow diagram and photo of the Steam Injection and Oxygen Concentration Control Apparatus

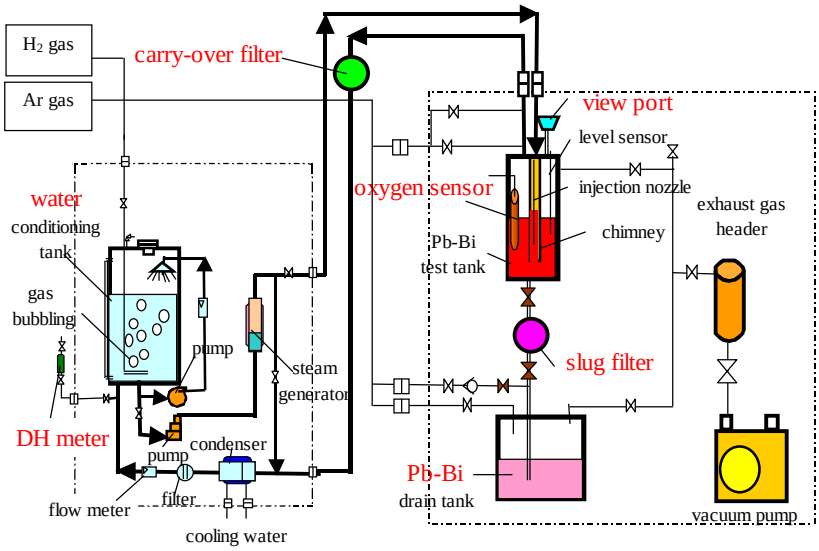

Steam Supply Sub-system Pb-Bi Test Sub-system

12.3 Materials testing facilities and their applications

Materials testing, the facilities used to characterise the materials behaviour in the liquid metal are principally of two types. One are static tests facilities, which are used for materials screening tests and for basic corrosion mechanism investigations. Usually on these static devices an oxygen control and monitoring system is installed in order to evaluate the basic corrosion mechanism in well controlled oxygen conditions. Some of these static devices are also devoted to the mechanical testing of not irradiated and irradiated materials in the liquid metal. The second type of materials testing facilities are loops. The tests performed with the loops are of importance for the evaluation of the long-term corrosion resistance of the materials. The tests were typically performed under well known conditions in terms of oxygen concentration, temperature, HLM flow rate. The database produced with the loop tests can be employed for the development and validation of corrosion prediction models.

Facility: Corrosion Test Stand for Stagnant Liquid Lead Alloys (COSTA) – *Figure 12.3.1*

FZK, Germany

Objectives:

- Investigation of corrosion mechanisms.
- Influence of protection layers and coatings on corrosion.
- Investigation of GESA treated surfaces.
- Influence of surface alloying on corrosion.

Facility: Corrosion in Dynamic Alloys (CORRIDA) – *Figure 12.3.2*

FZK, Germany

Objectives:

- Long-term corrosion investigations of structural materials in flowing LBE.
- Long-term corrosion investigations of coated materials in flowing LBE.
- Investigations on the mechanisms and the kinetics of material/LBE interactions.
- Modelling of corrosion/precipitation behaviour in LBE.
- Investigations on the applicability of “Oxygen Control System (OCS)” in large LBE loops.
- Testing of appropriate zirconia-based oxygen sensors in LBE as part of the OCS.

Operational parameters:

- Maximum temperature: 550°C.
- Minimum temperature: 400°C.
- Maximum (typical) flow rate: 4 (2) m/s.
- Electrical power: 170 kW.
- Number of test sections: 2.
- Number of samples: Ca. 32.
- Oxygen control system (OCS): Via H_2/H_2O ratio in gas phase.
- Oxygen sensors: 3 in LBE, 1 in gas phase.
- Heavy liquid metal: PbBi.

Figure 12.3.1. Sketch and photo of the COSTA facility

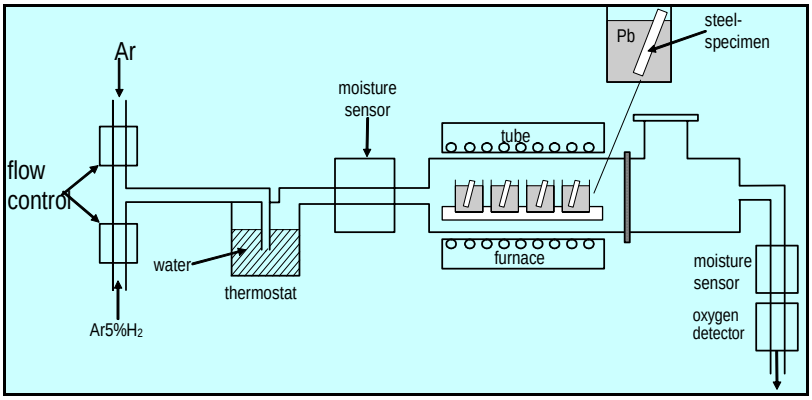

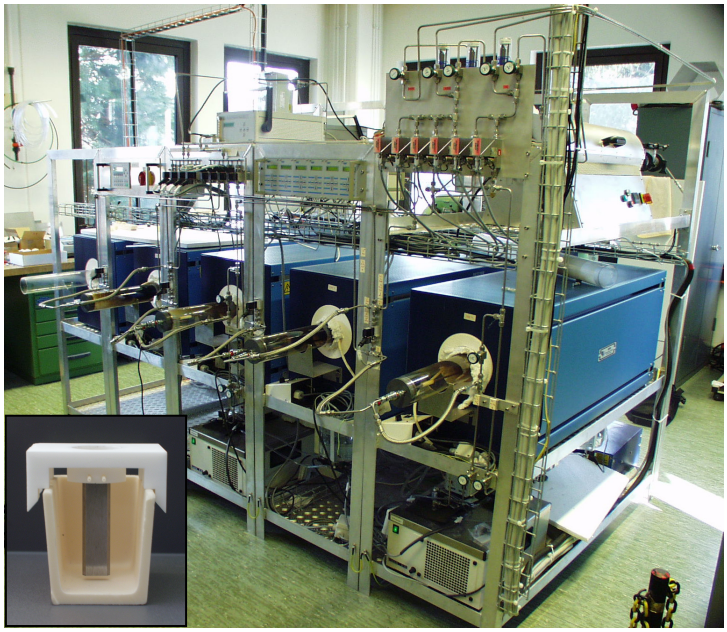

Figure 12.3.2. Scheme and photo of CORRIDA

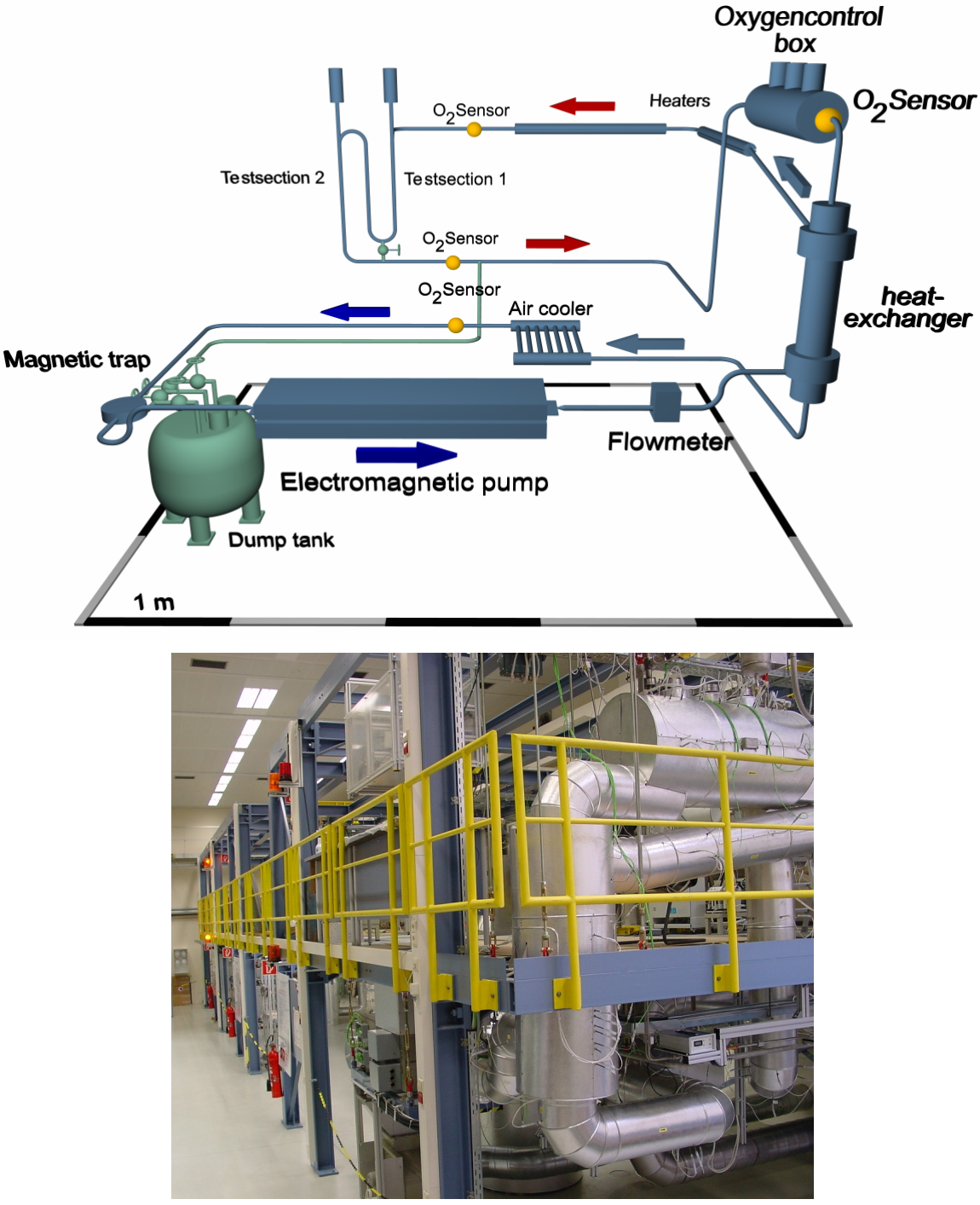

Facility: Lead Corrosion (LECOR) – *Figure 12.3.3*

ENEA, Italy

Objectives:

- Corrosion investigation in lead alloys.
- Component test and development.
- Physico-chemistry.

Operational parameters:

- Maximum temperature hot leg: 500°C.
- Maximum flow rate: 4.5 m^3/h.
- Maximum electrical power: 4 MW.
- Number of test sections: 3.
- Oxygen meter: Yes.
- Oxygen control: Separate addition of hydrogen and oxygen.
- Heavy liquid metal: Pb-Bi.

Facility: Development of Lead-alloy Technology and Applications (DELTA) – *Figure 12.3.4*

LANL, USA

Objectives:

- Corrosion tests of structural and surface treated materials in flowing LBE.
- Investigations on mechanisms of material/LBE interactions.
- Investigations and benchmarking of corrosion/precipitation and system kinetics models.
- Implementation, testing and improvement oxygen sensors and control systems in large LBE loops.
- Thermal hydraulics experiments (e.g. natural convection) and system modelling (e.g. TRAC) and benchmarking.
- Development and testing of components, data acquisition and control systems.

Operational parameters:

- Maximum temperature: 550°C.
- Minimum temperature: 400°C.
- Maximum (typical) flow rate: 5 (2) m/s.
- Electrical power: 65 kW (main heater).
- Number of test sections: 2 (corrosion, scc).
- Number of samples: 186 (in 32/holder batches).
- Oxygen control system (OCS): Direct injection of O_2/He and H_2/He.
- Oxygen sensors: 4 in LBE, 1 in gas phase.
- Heavy liquid metal: PbBi.

Figure 12.3.3. Scheme and photo of LECOR

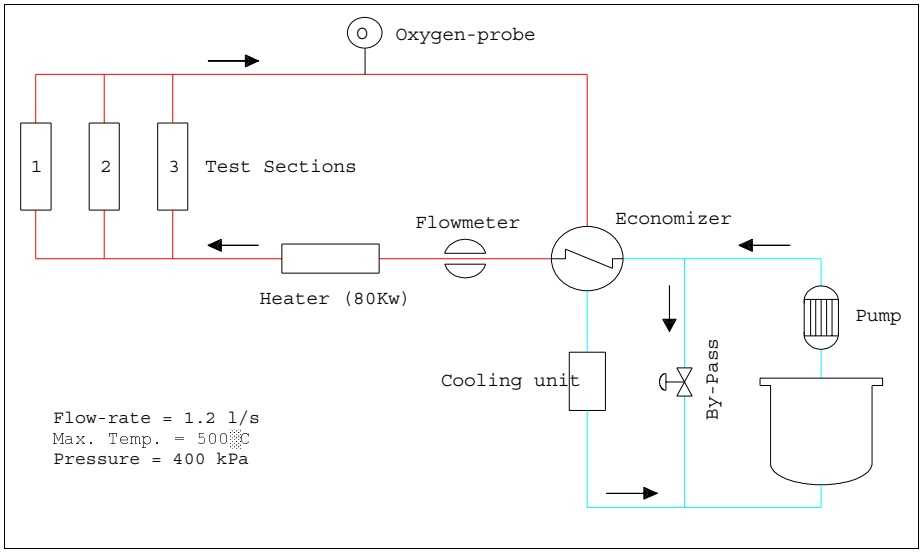

Figure 12.3.4. Scheme and photo of DELTA loop

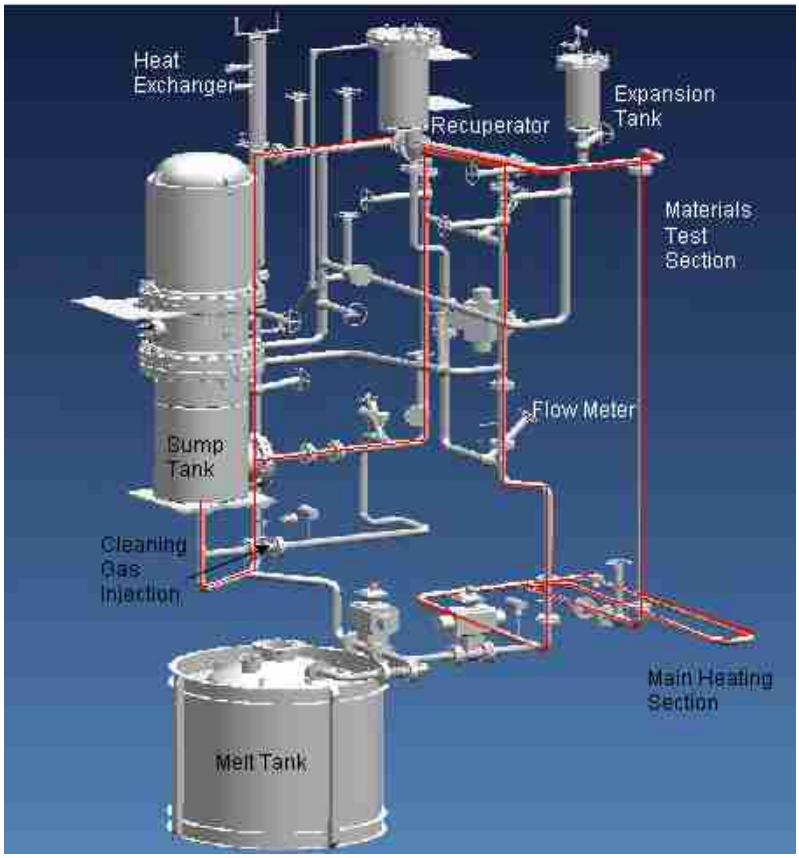

Facility: Lead Correlation Stand (LCS) – *Figure 12.3.5*

LANL/UNLV, USA

Objectives:

- Transfer and extend LBE coolant technology to high temperature Pb systems.
- Corrosion tests of structural and surface treated materials in flowing Pb.
- Thermal-hydraulics experiments (e.g. natural convection and flow stability).
- Adapting and testing of sensors, components, data acquisition and control systems to in-Pb use at higher temperatures.
- Test ODS steel (MA956) welding and construction for the loop.

Operational parameters:

- Maximum temperature: 700°C.
- Minimum temperature: 400°C.
- Maximum flow rate: 0.25 m/s.
- Electrical power: 15 kW (main heater).
- Number of test sections: 1 (corrosion).
- Number of samples: TBD.
- Oxygen control system (OCS): Direct injection of O_2/He and H_2/He.
- Oxygen sensors: 2.
- Heavy liquid metal: Pb.

Facility: COLIMESTA – *Figure 12.3.6*

CEA, France

Objectives:

- Corrosion studies of materials (including welds) and coatings.
- Corrosion mechanisms.
- Effect of oxygen content on corrosion processes.
- Corrosion kinetics.
- Development of corrosion models.

Operational parameters:

- Maximum temperature: 500°C.
- Maximum flow rate: Static.
- Number of test sections: 2.
- Oxygen control system (OCS): Yes.
- Heavy liquid metal: Pb-Bi.
- Corrosion protection: Aluminisation by pack cementation max.

Figure 12.3.5. Schematic of the Lead Correlation Stand (LCS)

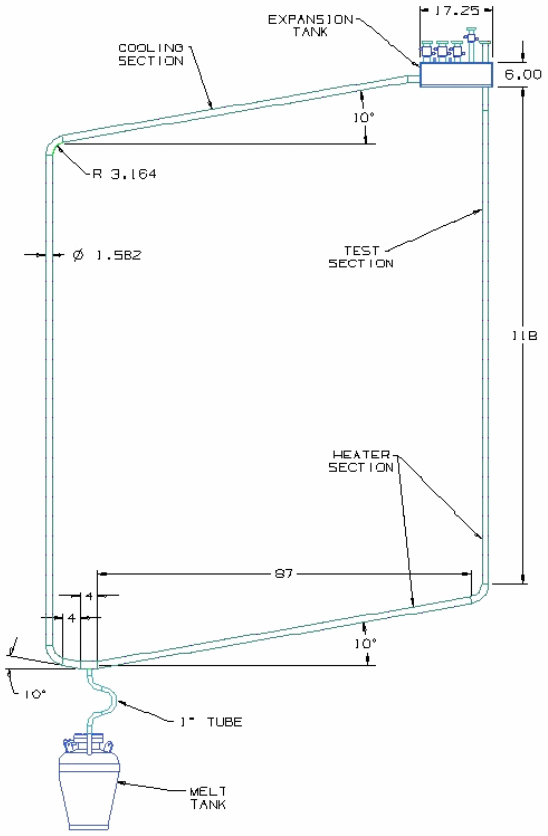

Figure 12.3.6. Scheme and photo of COLIMESTA

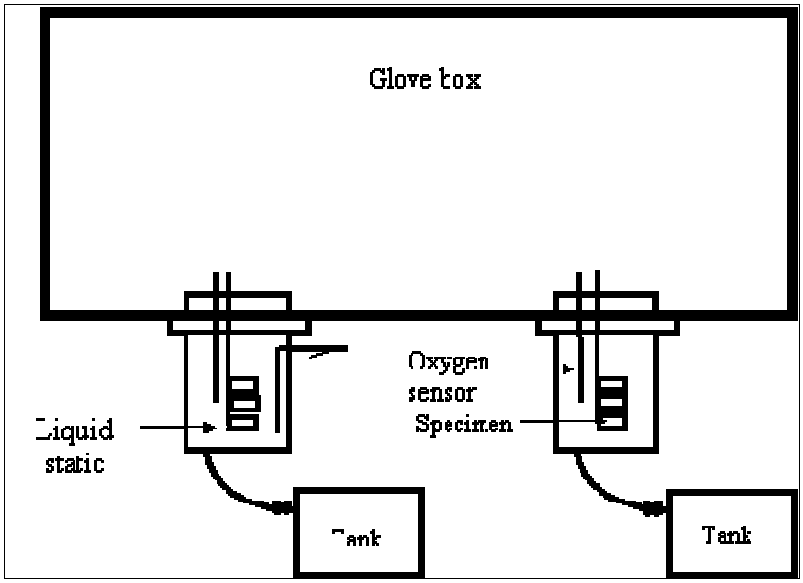

Facility: CICLAD – *Figure 12.3.7*

CEA, France

Objectives:

- Corrosion studies of materials (including welds) and coatings.
- Effect of hydrodynamic on corrosion by means of a rotating cylinder (especially at high velocity and including erosion phenomena).
- Effect of oxygen content on corrosion processes.
- Corrosion kinetics.
- Development of corrosion models.

Operational parameters:

- Maximum temperature: 500°C.
- Maximum flow rate: 5 m s^{-1} corresponding to 5000 rev.min^{-1}.
- Number of test sections : One with the rotating specimens, one with in-pipe specimens.
- Oxygen control system (OCS): Yes.
- Heavy liquid metal: Pb-Bi.
- Corrosion protection: Aluminisation by pack cementation max.
- Oxygen control system (OCS): Yes.

Facility: Liquid Solid Reaction (LiSoR) – *Figure 12.3.8*

PSI, Switzerland

Objectives:

- Investigation of the effect of simultaneous interaction of irradiation, LBE and mechanical stresses with structural materials.

Operational parameters:

- Maximum temperature: 350°C.
- Maximum flow rate: 1 m/s in the test section.
- Maximum electrical power: 30 kW.
- Number of test sections: 1.
- Oxygen control system (OCS): No.
- Heavy liquid metal: Pb-55.5Bi.

Irradiation parameter:

- Beam energy on target: 72 MeV.
- Beam current: Minimum 15 μA, maximum 40 μA.
- Beam profile on target (Gaussian) : $\sigma_x = \sigma_y = 1.6$ mm.
- Beam wobbling max frequency: 14.3 Hz in X, 2.38 Hz in Y (6:1).
- Beam structure: Wobbling horizontal $x_{max} = \pm 2.75$ mm, wobbling vertical $y_{max} = \pm 7$ mm.

Figure 12.3.7. Scheme and photo of CICLAD

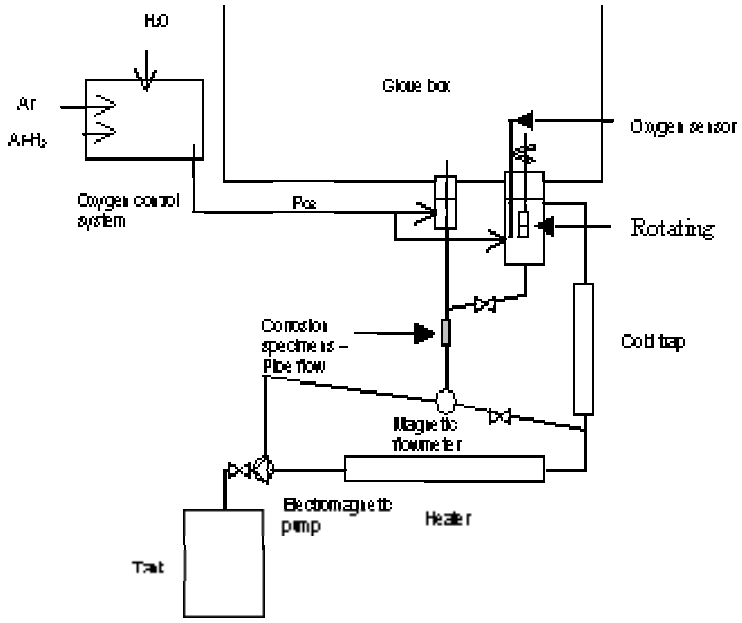

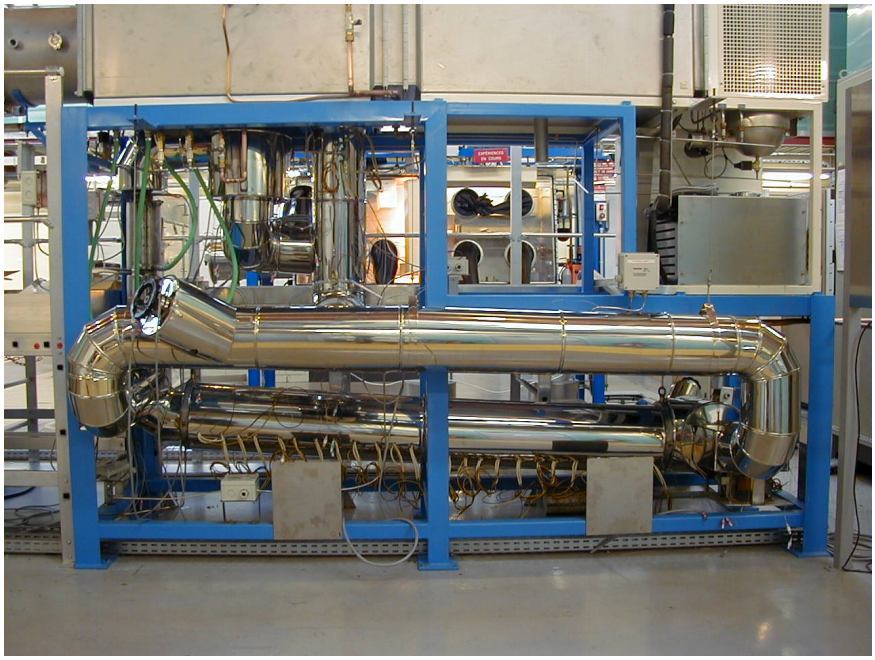

Figure 12.3.8. Scheme and photo of LISOR

1 – LBE tank, 2 – induction pump, 3 – electromagnetic flow meter, 4 – thermostat (4-1 – LBE-DIPHYL heat exchanger, 4-2 –DIPHYL-WATER heat exchanger, 4-3 – oil pump; 4-4 – ventury tube, 4-5 – bypass, 4-6 – oil expansion tank, 4-7 – valves for oil loop filling and draining), 5-12 – automatic valves, 13 – expansion tank, 14 and 15 – inlet and outlet pipe

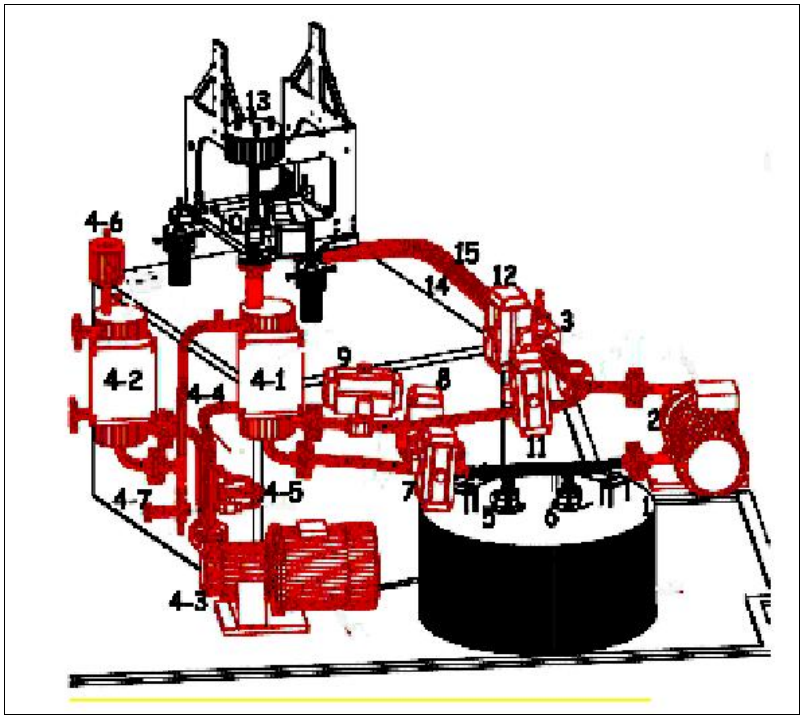

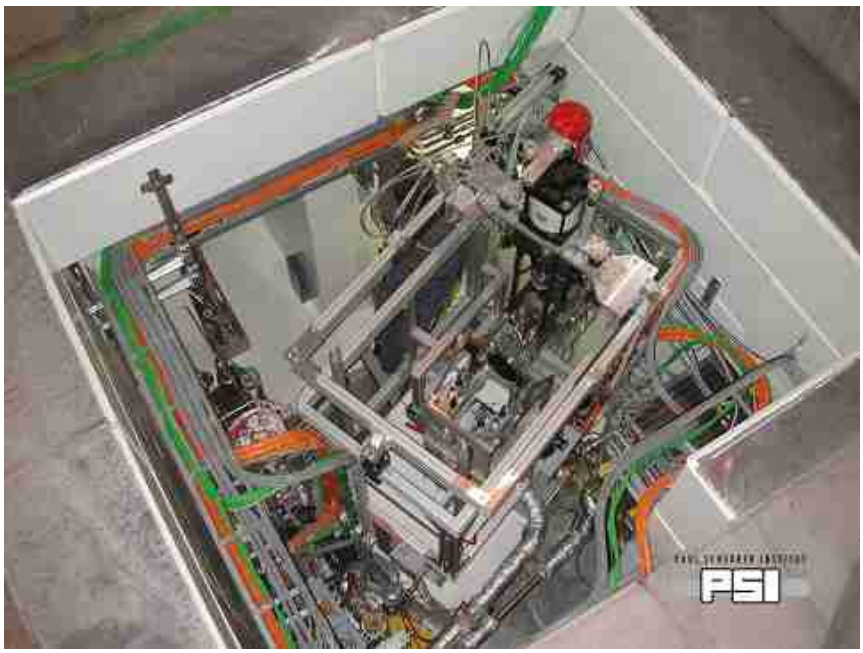

Facility: **Corrosion and Wetting Investigation (CorrWett) –** ***Figure 12.3.9***

PSI, Switzerland

Objectives:

- Corrosion.
- Thermal cycling.
- Investigation of stressed coated specimens.

Operational parameters:

- Maximum temperature: 350°C.
- Maximum flow rate: 0.8 m/s in the test section.
- Maximum electrical power: 8.6 kW.
- Number of test sections: 1.
- Oxygen control system (OCS): No.
- Heavy liquid metal: Pb-55.5Bi.

Facility: **SSRT/stagnant experimental set-up –** ***Figure 12.3.10***

SCK•CEN, Belgium

Objectives:

- Effects of Pb-Bi on the mechanical properties of the structural materials.
- Mutual effect of Pb-Bi and irradiation (mechanical tests on pre irradiated materials).
- Oxygen control and measurements of the dissolved oxygen concentration.

Operational parameters:

- Maximum temperature: 500°C.
- Maximum electrical power: 3.5 KW.
- Number of test sections: 1 (autoclave).
- Volume of the liquid metal: ~2.5 litre.
- Oxygen control system (OCS): Yes.
- Heavy liquid metal: Pb-Bi

Figure 12.3.9. Scheme and photo of CorrWett

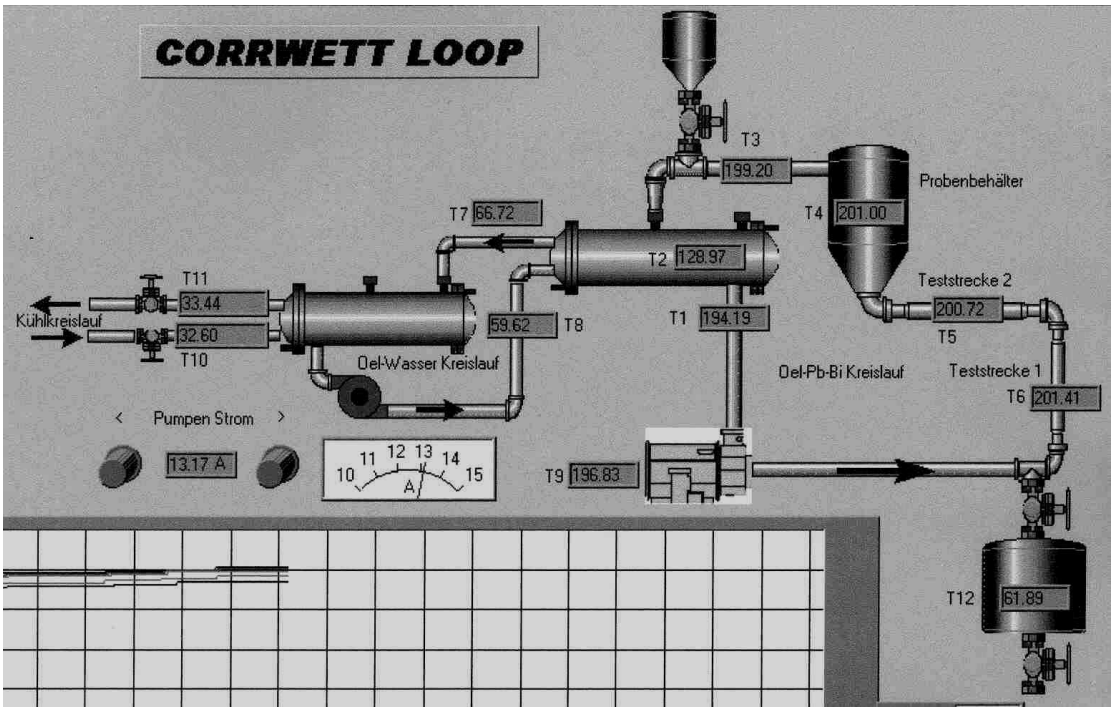

Figure 12.3.10. Scheme and photo of SSRT/stagnant experimental set-up

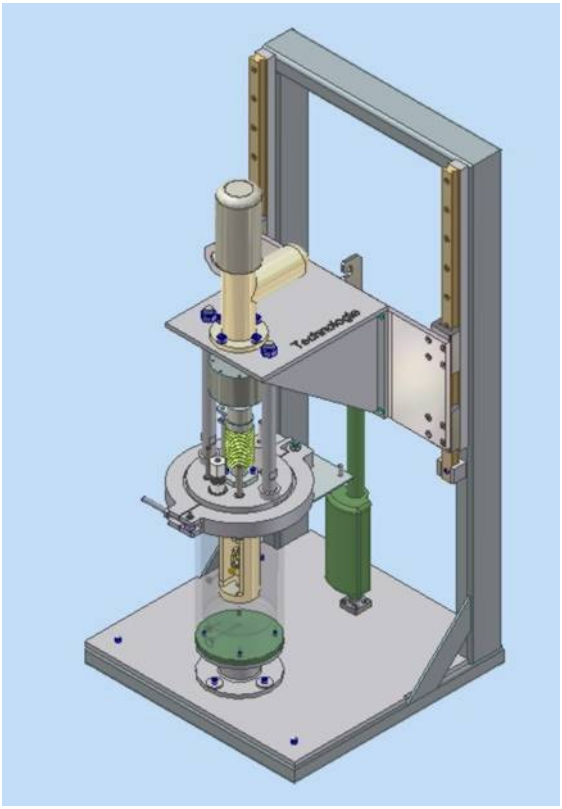

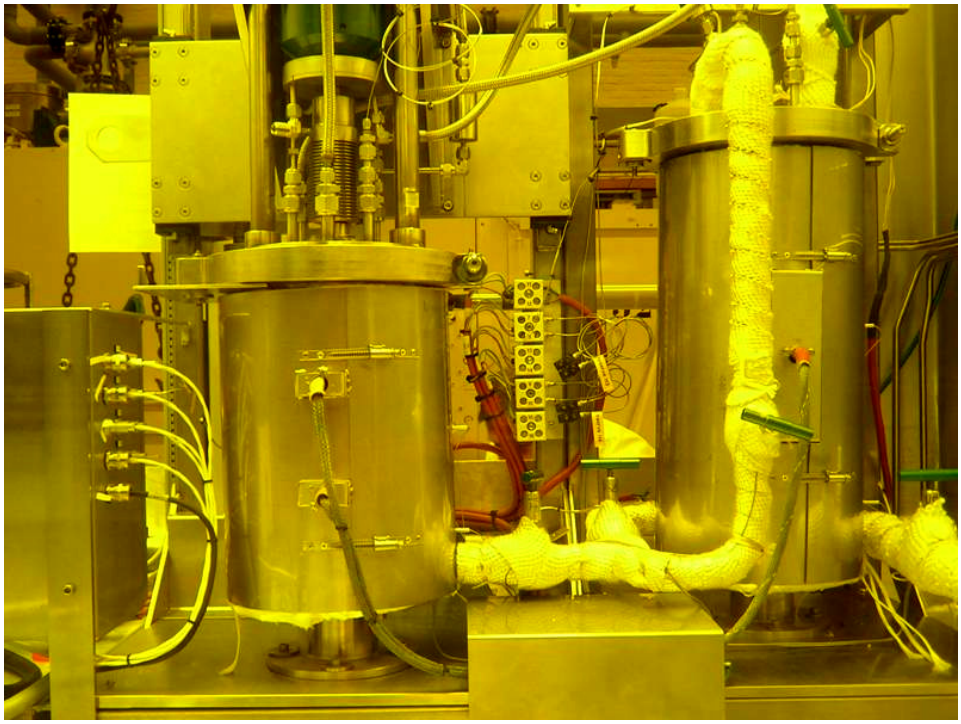

Facility:* FELIX/FEDE – *Figure 12.3.11

CIEMAT, Spain

Objectives:

- Materials screening test in stagnant conditions.

Operational parameters:

- Different gas atmospheres are used.
- Oxygen content is measured.
- Maximum temperature 600°C.

Facility:* CIRCO (natural convection loop) – *Figure 12.3.12

CIEMAT, Spain

Objectives:

- Long-term corrosion experiments in quasi-static LBE.
- Testing of oxygen sensors.
- Destructive examination of the loop after the test.

Operational parameters:

- Structural material: AISI316L.
- LBE inventory: 1 L.
- Max temperature: 550°C.
- Temperature gradient: 150°C.

Facility:* LINCE (forced convection loop) – *Figure 12.3.13

CIEMAT, Spain

Objectives:

- Long-term corrosion experiments in LBE.
- Oxygen control systems in flowing LBE.

Operational parameters:

- Maximum temperature: 500°C.
- Maximum flow rate: 2,5 m^3/h.
- Number of test sections: 2.
- Lead-bismuth inventory: 170 L.
- Electrical power: 80 kW.
- Oxygen control system installed.

Figure 12.3.11. Scheme and photo of FEDE and FELIX

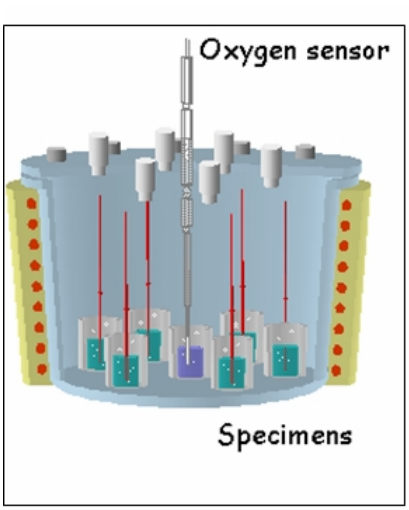

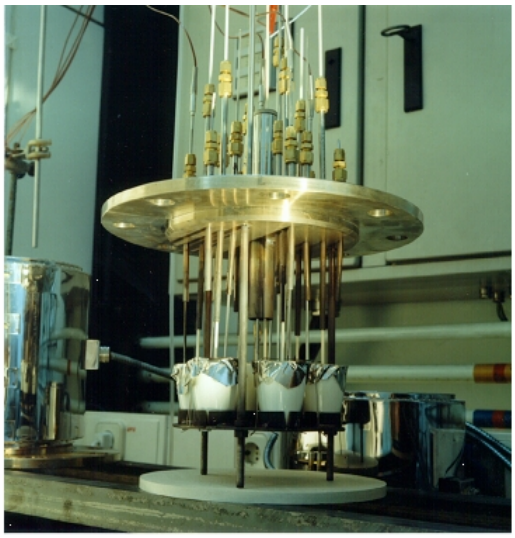

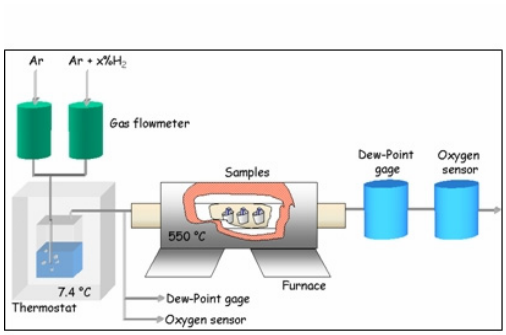

Figure 12.3.12. Photo of CIRCO

Figure 12.3.13. Scheme of LINCE

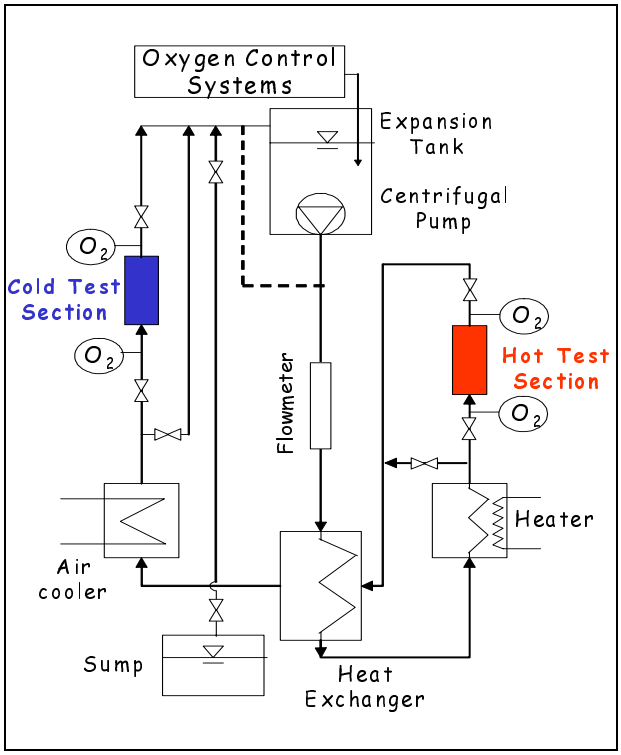

Facility: JAERI Lead-bismuth Static Corrosion Facility (JLBS) – *Figure 12.3.14*

JAERI, Japan

Objectives:

- Corrosion of materials for ADS components under static condition.
- Screening tests of materials for ADS components.
- Corrosion mechanism of various materials in Pb-Bi.
- Corrosion of surface-treated materials.
- Effect of alloying elements and stress on corrosion in Pb-Bi.
- Effect of impurities in Pb-Bi

Operational parameters:

- Maximum temperature: 600°C.
- Number of pots: 4.
- Number of test pieces: 10/pot.
- Diameter of pot: 100 mm.
- Heavy metal weight: 7 kg/pot.
- Oxygen control system (OCS): Yes (partially).
- Heavy liquid metal: Pb-Bi.

Facility: JAERI Lead-bismuth Flow Loop (JLBL-1) – *Figure 12.3.15*

JAERI, Japan

Objectives:

- Corrosion study of ADS components in flowing Pb-Bi.
- Development of Pb-Bi flow control.
- Material corrosion-proof test for ADS target test facility at JAERI.

Operational parameters:

- Maximum temperature: 450°C.
- Maximum pressure: 5 bar.
- Maximum flow rate: 18 L/min.
- Maximum electrical power: 15 kW heaters.
- Number of test sections: 2.
- Oxygen control system (OCS): Under preparation.
- Heavy liquid metal: Pb-Bi.

Facility: CRIEPI Static Corrosion Test Facility – *Figure 12.3.16*

CRIEPI, Japan

Objectives:

- Behaviour of static corrosion in Pb-Bi

Operational parameters:

- Maximum temperature: 700°C.
- Number of pots: 2.
- Number of test piece: 8 / pot.
- Diameter of the pot: 100 mm.
- Step extraction of pieces: Yes.
- Oxygen control system: Yes.

Figure 12.3.14. Photo of JLBS

Figure 12.3.15. Scheme and photo of JLBL-1

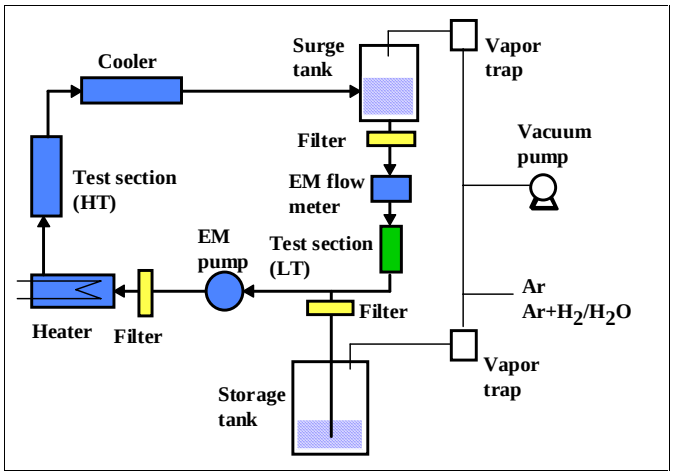

Figure 12.3.16. Photo of CRIEPI static corrosion test facility

Facility: **KPAL-I –** ***Figure 12.3.17***

KAERI, Korea

Objectives:

- Database for Pb-Bi corrosion.
- Development of oxygen control technique.
- Development of oxygen sensor.
- Development of thermal-hydraulic device for Pb-Bi loop.
- Enhancement of Pb-Bi Loop operation technique.

Operational parameters:

- Maximum temperature: 550°C.
- Maximum flow rate: 3.6 m³/h at 4.0 m NPSH.
- Maximum electrical power: 120 kW.
- Number of test sections: 1.
- Maximum test section height: 0.9 m.
- Oxygen control system (OCS): Yes.
- Heavy liquid metal: Pb-Bi.

Facility: **Convectional Loop, COLONRI I –** ***Figure 12.3.18***

Nuclear Research Institute Řež, Czech Republic

Objectives:

- Evaluation of corrosion resistance of structural materials in lead-bismuth at different conditions.
- Impact of oxygen content (oxygen technology).

Operational parameters:

- Maximum temperature: 700°C.
- Maximum flow rate: 1-2 cm/s.
- Maximum electrical power: 4 KW.
- Number of test sections: 2.
- Maximum test section height: 2.5 m.
- Oxygen control system (OCS): Yes – indirectly.
- Heavy liquid metal: Pb-Bi.

Figure 12.3.17. KAERI Pb-Bi loop

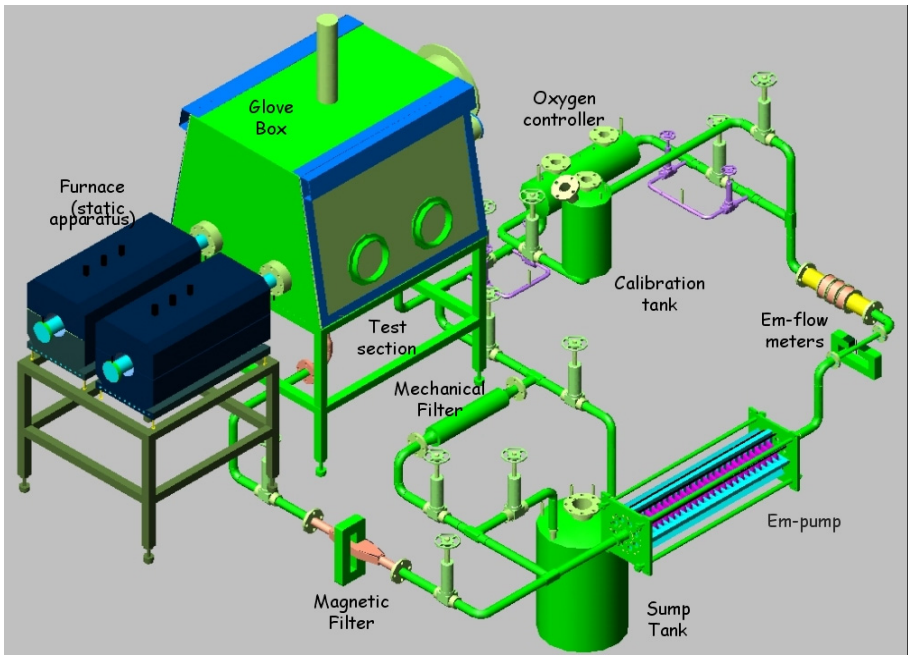

Figure 12.3.18. Scheme and photo of COLONRI I

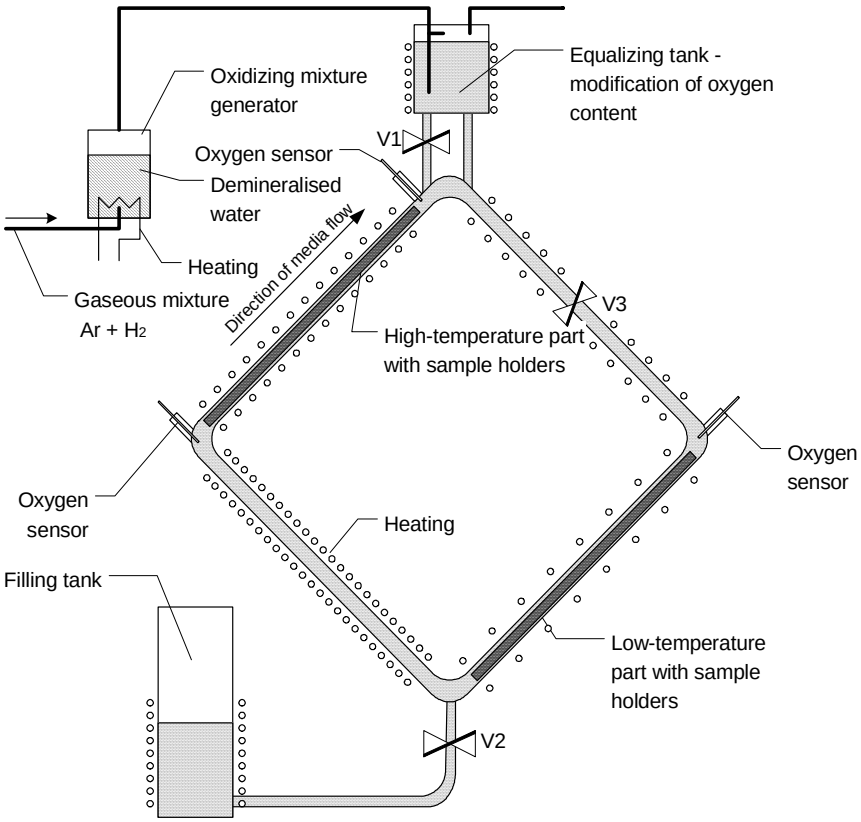

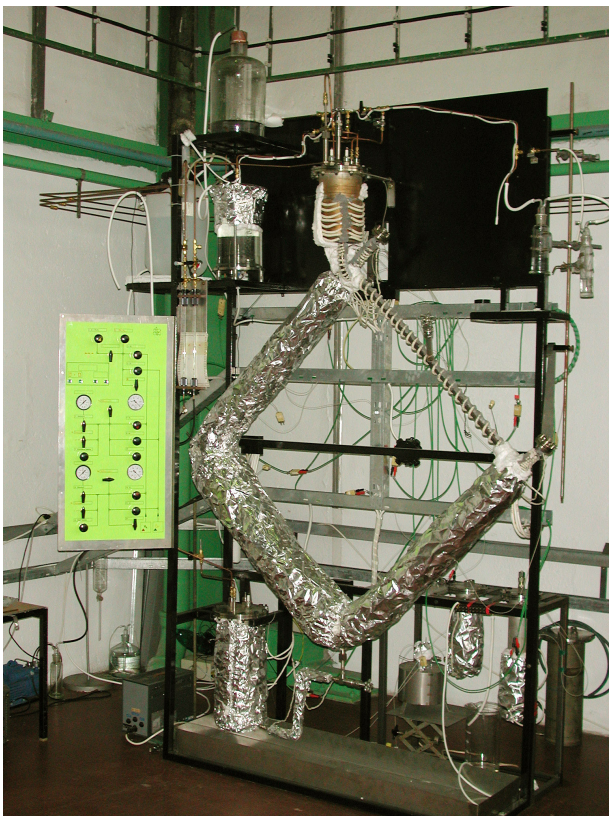

Facility: ***– Figure 12.3.19***

ANL, USA

Objectives:

Natural Convection Quartz Harps based on J.V. Cathcart and W.D. Manley, *Corrosion*, 10, (1954) 432.

- Long-term corrosion investigations of structural materials in flowing Pb or LBE.
- Long-term corrosion investigations of coated materials in flowing Pb or LBE.
- Investigations regarding corrosion mechanisms and thermo-mechanical behaviour between materials and Pb or LBE.

Operational parameters:

- Maximum temperature: 800°C.
- Minimum temperature: 375°C (LBE), 500°C (Pb).
- Typical flow rate: ~0.01 m/s.
- Electrical power: Low.
- Number of test sections: 2.
- Number of samples: 2.
- Oxygen control system: Via H_2/H_2O ratio in gas phase.
- Oxygen sensors: –.
- Heavy liquid metal: Pb or LBE.

Facility*: H.H. Uhlig Corrosion Laboratory – *Figure 12.3.20

MIT, US

Objectives:

- Corrosion tests of structural and surface treated materials in LBE.
- Investigations on fundamental mechanisms of material/LBE interactions.
- Investigations and benchmarking of corrosion/precipitation and system kinetics models.
- Implementation, testing and improvement oxygen sensors.

Operational parameters:

- Maximum temperature: 800°C.
- Minimum temperature: 400°C.
- Maximum/minimum flow velocity: 3/0 m/s.
- Electrical power: 15 kW/test station (heater).
- Number of test stations: 2 (corrosion, scc, rotating electrode).
- Number of samples (immersion): 15/test station (individual crucibles).
- Number of samples (rotating): 1/test station.
- Oxygen control system (OCS): Direct injection of O_2/He and H_2/He, H_2/H_2O.
- Oxygen sensors: 1 in LBE, 1 in gas phase.
- Heavy liquid metal: PbBi/Pb.

Figure 12.3.19. Schematic and photo of quartz convection harp

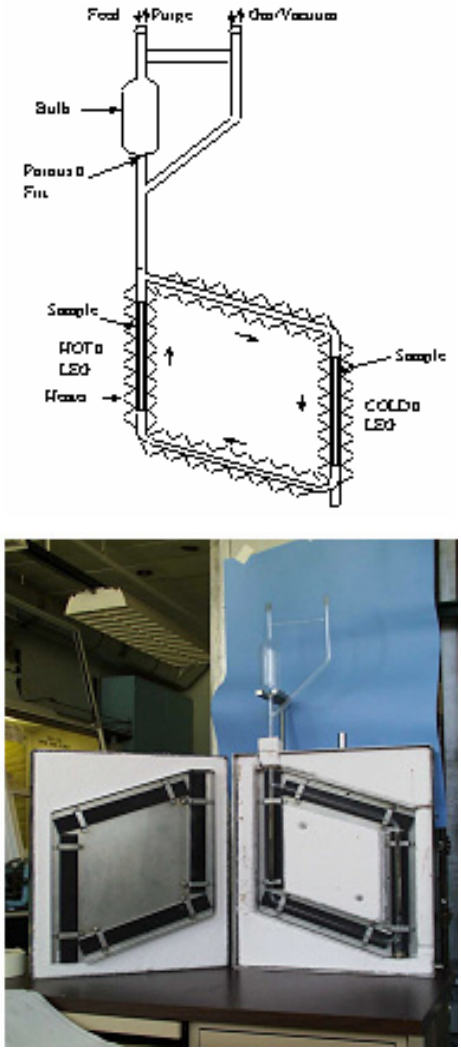

Figure 12.3.20. Schematic of rotating electrode system and photograph of various components of the system

Facility: Mechanical Properties in Liquid Metals – *Figure 12.3.21*

University of Lille – UMR CNRS 8517, France

Objectives:

Determination of mechanical behaviour and mechanical resistance of structural metallic alloys in liquid metals.

- Monotonic tensile behaviour:
  - standard tensile test (STT) using cylindrical specimen;
  - small punch test (SPT) using 9 mm diameter, 0.5 mm thickness disk.
- Cyclic behaviour:
  - low cycle fatigue (LCF) on smooth specimen;
  - fatigue crack growth gate (FCGR) on notched specimen.

Operational parameters:

- Maximum temperature: 350°C for LCF, FCGR and SPT, 600°C for STT.
- Maximum flow rate: Static.
- Oxygen control system: No.
- Heavy liquid metals: Pb, Bi, Sn …
- Machine for STT and SPT: 20 kN load capacity strain rate 10^{-2} to 10^{-5} s^{-1}.
- Machine for LCF: 100 kN load capacity – strain control, strain range $\Delta\varepsilon_t$: 0.5 10^{-2} to 2.5 10^{-2} strain rate 10^{-2} to 10^{-4} s^{-1}.
- Machine for FCGR: 100 kN load capacity – load control, four-point bending specimen frequency 15 Hz maxi COD measurement.

Facility: Lead-bismuth Corrosion Test Loop – *Figure 12.3.22*

Research Laboratory for Nuclear Reactors, Tokyo Institute of Technology, Japan

Objectives:

- Material corrosion in flowing Pb-Bi.
- Oxygen control technique.
- Performance of oxygen sensor.
- Performance of electromagnetic flow meter.
- Performance of ultrasonic flow meter.

Operational parameters:

- Maximum temperature: 550°C.
- Maximum system pressure: 0.4 MPa.
- Maximum flow rate: 0.36 m^3/h.
- Maximum electrical power: 22 kW.
- Number of test sections: 1.
- Maximum test section height: 1.5 m.
- Oxygen control system (OCS): Yes (PbO tablets).
- Heavy liquid metal: Pb-Bi eutectic.
- Pb-Bi inventory: 450 kg.

Figure 12.3.21. Photo of fatigue propagation set-up

Figure 12.3.22. Flow diagram and photo of the Lead-bismuth Corrosion Test Loop at TIT

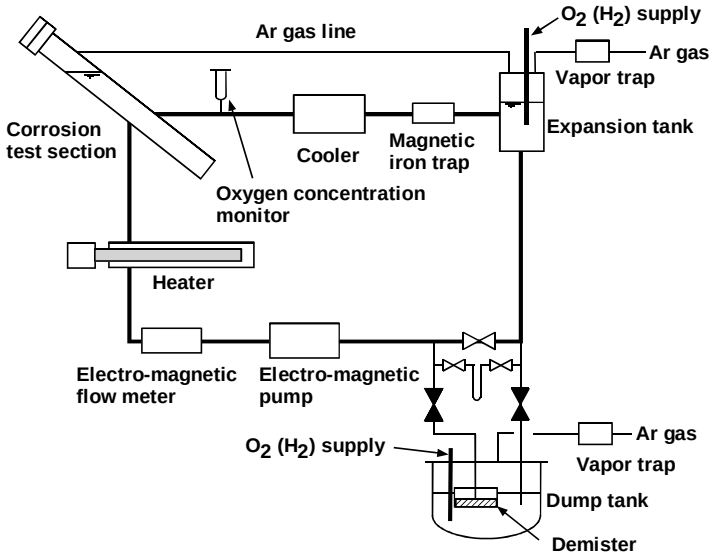

Facility:* Liquid Metal Embrittlement Testing Station 1 (LIMETS1) – *Figure 12.3.23
In operation: August 2004

SCK•CEN, Belgium

Objectives:

- Effects of Pb-Bi on the mechanical properties of the structural materials.
- Calibration of oxygen sensors.
- Effects of oxide layers on the mechanical properties of the structural materials.

Operational parameters:

- Maximum temperature: 500°C.
- Maximum electrical power: 3.5 KW.
- Number of test sections: 1 (autoclave).
- Volume of the liquid metal: ~3.5 litre.
- Oxygen control system (OCS): Yes.
- Heavy liquid metal: Pb-Bi.

Facility*: Liquid Metal Embrittlement Testing Station 2 (LIMETS2) – *Figure 12.3.24
Planned operation: January 2006

SCK•CEN, Belgium

Objectives:

- To test radioactive materials in a controlled lead-bismuth environment.
- Tests that can be carried out are:
  - slow strain rate tests (SSRT);
  - constant load;
  - rising load;
  - crack growth rate (fracture mechanics).

Operational parameters:

- Maximum temperature: 500°C.
- Maximum pressure: 4 Bar.
- Maximum load: 20 kN.
- Displacement rates: 9.10^{-2} to 3.10^{-6} $mm.s^{-1}$.
- Strain rates (gage length 10 mm): 9.10^{-3} to 3.10^{-7} s^{-1}.
- Maximum displacement: 30 mm.
- Specimens to be tested: Tensile specimen, small size CT.
- Number of autoclaves and loading units: 1.
- Autoclave volume: 3.6 L.
- Autoclave materials: 316L.
- Material conditioning system: 316L.
- Conditioning gasses: Hydrogen, argon.

Figure 12.3.23. Schematic and photo of the LIMETS 1 facility

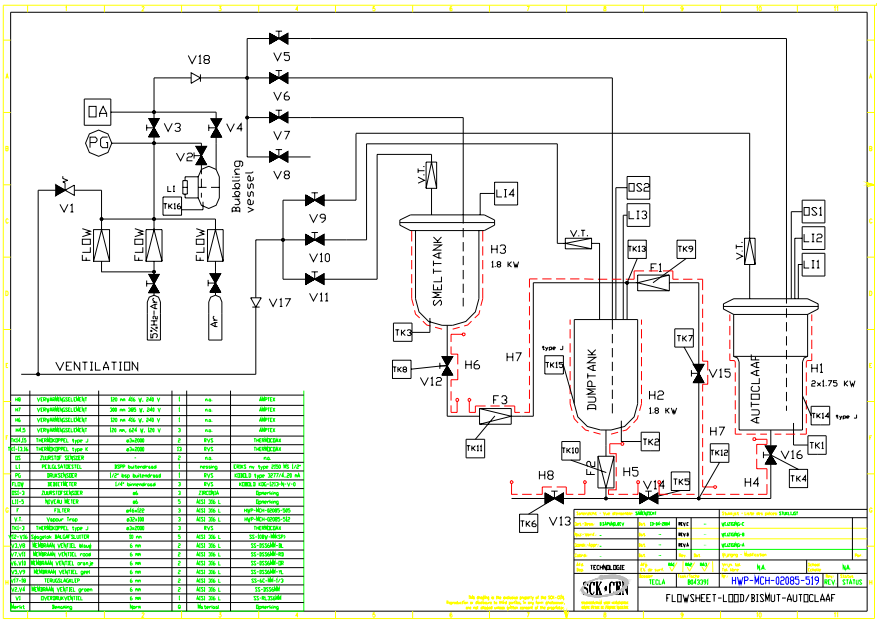

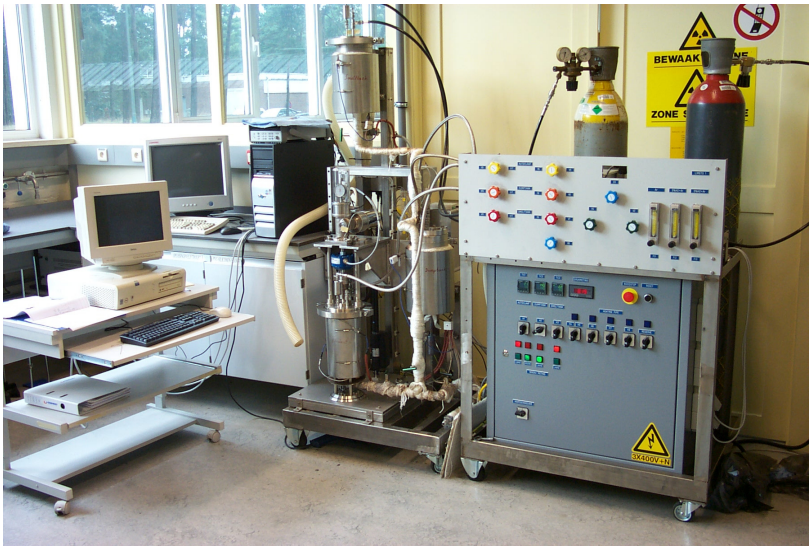

Figure 12.3.24. Flow sheet of the LIMEST II and photo of instrumentation panel for temperature control of LIMETSII

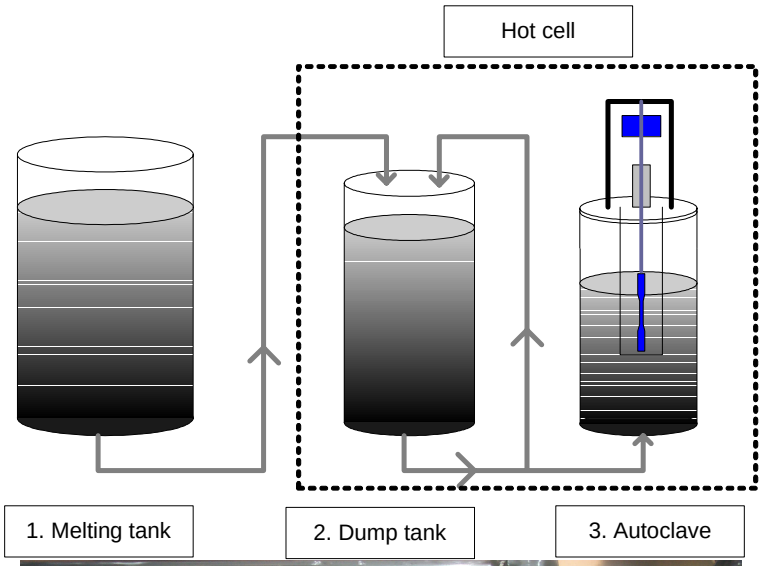

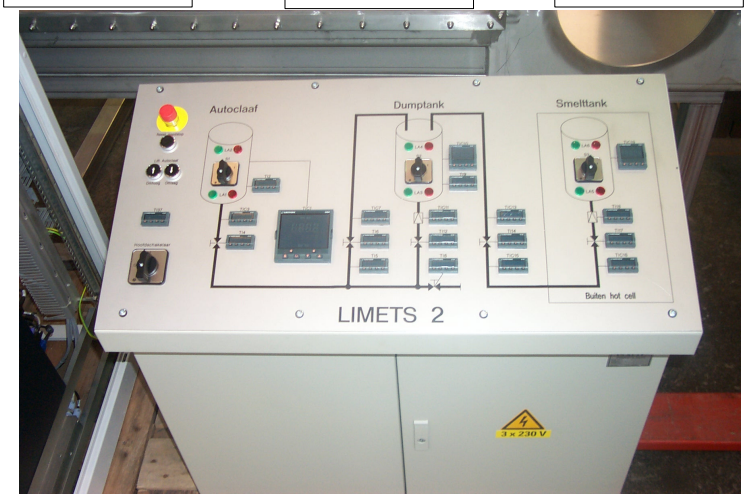

12.4 Thermal-hydraulics facilities and their applications

Thermal-hydraulics, the facilities are aimed at the study of basic phenomena as for instance the turbulent heat transfer, the free surface flow and two-phase flows. These phenomena can be studied by performing experiments with simple geometries. In addition, a very challenging activity is the execution of design oriented experiments as for instances experiments devoted to the characterisation of a spallation target or a fuel bundle. The experimental activities are normally prepared with the help of computational analysis (CFD calculations). One of the most important aims of thermal-hydraulics experiments is to improve physical models and to validated the CFD codes. The importance of these activities can be recognised in the fact that CFD codes are regularly used for the layout of the design of an HLM system.

Facility: Thermal-hydraulics and ADS Design (THEADES) – *Figure 12.4.1*

FZK, Germany

Objectives:

- Thermal-hydraulic single-effect investigations of ADS components.
- Cooling of the beam window.
- Flow field of a windowless target configuration.
- Cooling of fuel element(s).
- Heat transfer characteristics of a Pb-Bi/Pb-Bi heat exchanger.
- Heat transfer characteristics of a steam generator.
- Heat transfer characteristics of a Pb-Bi/air heat exchanger.
- Set-up of thermal-hydraulic data base for physical model and code validation.

Operational parameters:

- Maximum temperature: 450°C.
- Maximum flow rate: 100 m³/h at 4.5 m NPSH.
- Maximum electrical power: 4 MW.
- Number of test sections: 4.
- Maximum test section height: 3.4 m.
- Oxygen control system (OCS): Yes.
- Heavy liquid metal: Pb-Bi.

Facility: Circolazione Eutettico (CIRCE) – *Figure 12.4.2*

ENEA, Italy

Objectives:

- Thermal-hydraulic experiments.
- Component development.
- Large scale experiments in pool configuration.
- Liquid metal chemistry in pool configuration.

Operational parameters:

- Maximum temperature: 450°C.
- Volume test section: 9480 l.
- Volume storage tank: 9250 l.
- Volume pumping tank: 924 l.
- Oxygen meter: No.
- Oxygen control: Yes (controlling the cover gas).
- Heavy liquid metal: Pb-Bi.

Figure 12.4.1. Scheme and photo of THEADES

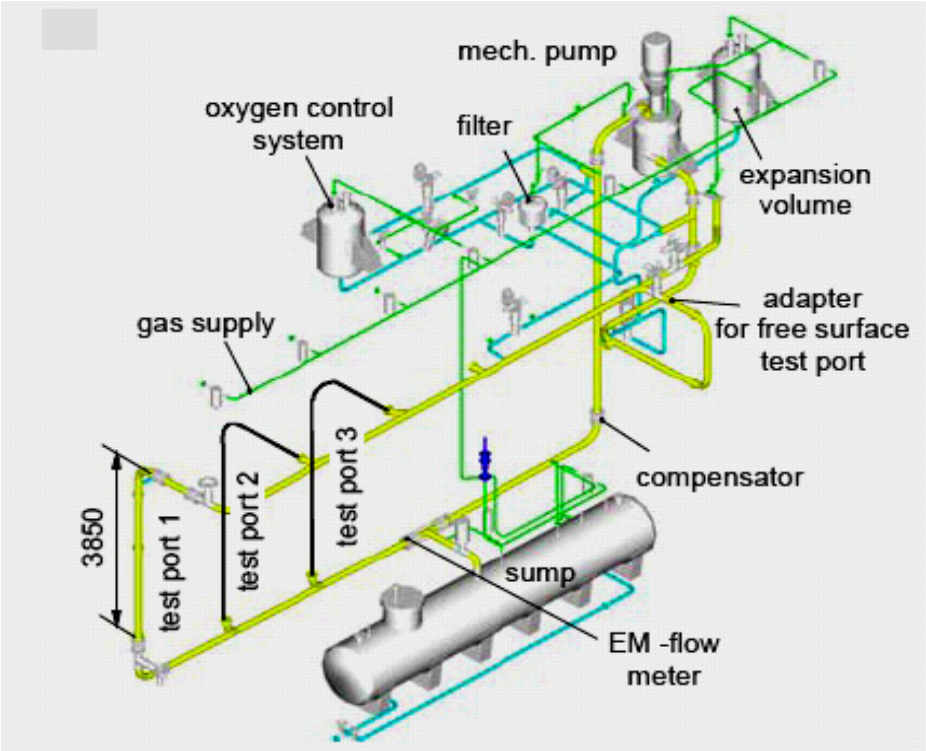

Figure 12.4.2. Schematic and photo of CIRCE

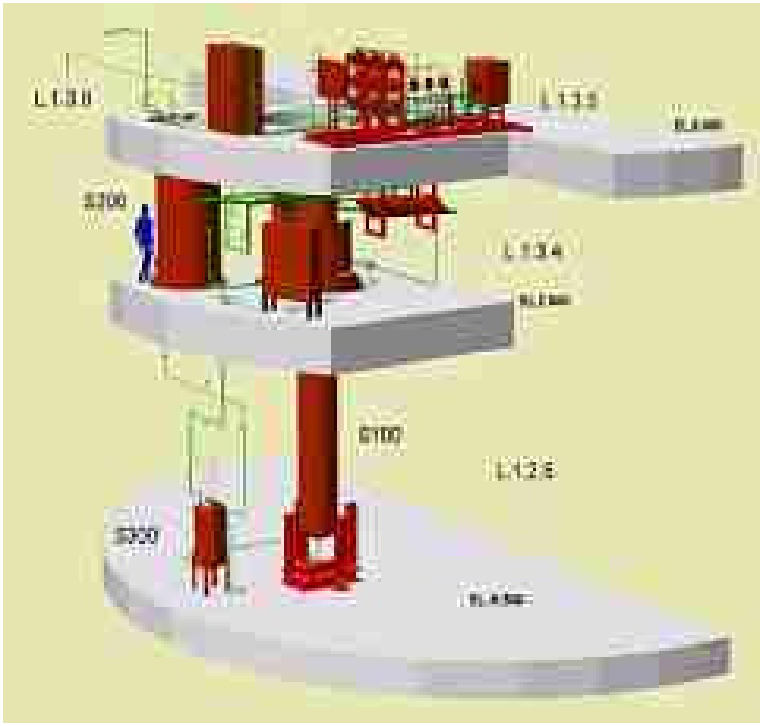

Facility*: Thermal-hydraulic ADS Lead-bismuth Loop (TALL) – *Figure 12.4.3

RIT (KTH), Sweden

Objectives:

- To perform medium-scale heat transfer experiments of TECLA on different heat exchangers.
- Investigation on LBE flow and heat transfer with prototypic thermal-hydraulic conditions (as in conceptual ADS design).
- Thermal-hydraulic characteristics of natural and forced circulation under steady and transient conditions.
- To perform tests representative for accident scenarios and to strengthen the database for code validation in support of EU's project PDS-XADS.
- Set-up of thermal-hydraulic data base for physical model and code validation.

Operational Parameters:

- Maximum temperature: 500°C.
- Maximum flow rate: 2.5 m³/h.
- Maximum electrical power: 55 kW.
- Electro-magnetic pump: 5.5 kW
- Maximum test section height: 6.8 m.
- Oxygen control system (OCS): No.
- Oxygen control sensors: Yes.
- Heavy liquid metal: Pb-Bi.
- Secondary loop coolant: Glycerol.

Facility*: JAERI Lead-bismuth Flow Loop (JLBL-2) – *Figure 12.2.4

JAERI, Japan

Objectives:

- Flow study in horizontal Pb-Bi target.
- Proof test of I-target.

Operational parameters:

- Maximum temperature: <450°C.
- Maximum pressure: 2 bar.
- Maximum flow rate: 50 L/min.
- Maximum electrical power: 5 kW heaters.
- Number of test sections: –.
- Oxygen control system (OCS): No.
- Heavy liquid metal: Pb-Bi.

Figure 12.4.3. Schematic and photo of TALL

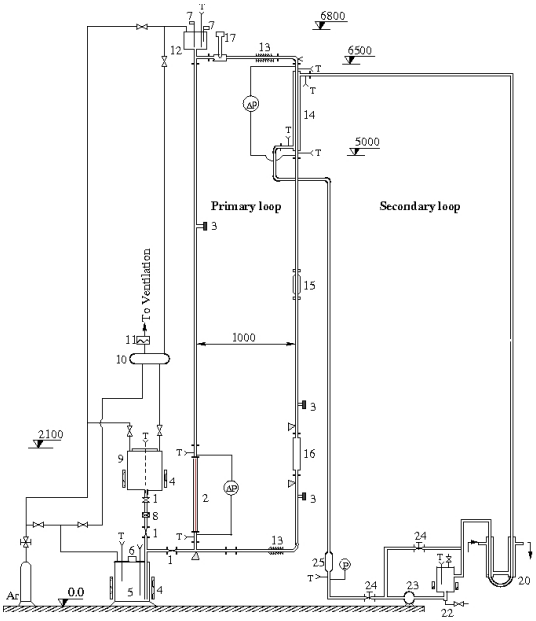

Primary loop:
Piping—33.4mm O.D. and 27.8mm I.D.
Material—AISI 316 stainless steel
Working fluid — LBE
Max flowrate — 15 liters/min
Preheating of piping — Rope heater

1–Valve for LBE
2–Fuel Rod Simulator, 22 kW
3–Blind flange
4–Melting heater (6kW)
5–Sump tank for LBE
6–Observing window
7–Level sensor
8–Filter
9–Melting tank
10–Exhaust gas tank
11–HEPA filter
12–Expansion tank

Secondary loop:
Piping—26.7mm O.D. and 23.3mm I.D.
Piping material—carbon steel
Working fluid — Glycerol
Max flowrate — 260 liters/min
Preheating of piping — Band heater

13–Expansion tube
14–LBE–oil heat exchenger
15–EM Flowmeter
16–EM Pump
17–Oxygen meter

20–Oil–water heat exchenger
21–heater (3kW)
22–Sump tank for oil
23–Oil pump
24–Valve for oil
25–Flowmeter for oil

Figure 12.4.4. Schematic and photo of JLBL-2

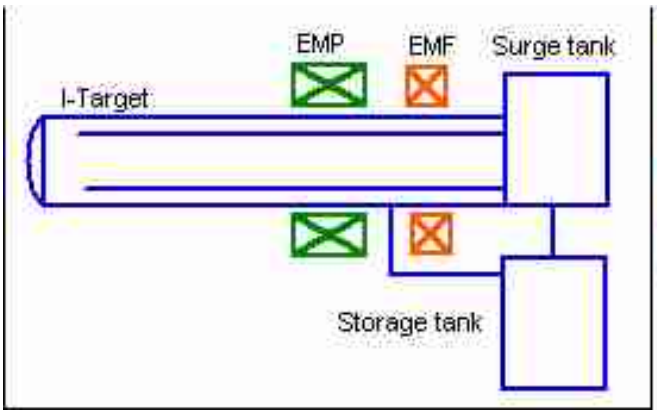

Facility: **JAERI Lead-Bismuth flow Loop-3 (JLBL-3) – *Figure 12.4.5***

JAERI, Japan

Objectives:

- Thermal fluid test of beam window.
- Proof test of mechanical pump and massive Pb-Bi flow.

Operational parameters:

- Maximum temperature: 450°C
- Maximum pressure: 7 bar.
- Maximum flow rate: 500 L/min.
- Maximum electrical power: 6 kW heaters.
- Number of test sections: 1.
- Oxygen control system (OCS): Yes
- Heavy liquid metal: Pb-Bi.
- Total inventory: 450 litres.

Facility*: Mitsui Engineering and Shipbuilding Test LOOP 2001 (MES-LOOP2001) – *Figure 12.4.6

MES, Japan

Objectives:

- Coolant purification control test.
- Structural materials corrosion test.
- Thermal-hydraulic test.
- Static/transient operation test.

Operational parameters:

- Maximum temperature: 550°C
- Maximum flow rate: 15 L/min
- Maximum electrical power: 6 kW
- Number of test sections: 1.
- Number of test pieces: 1–10.
- Maximum test section height: 1 m.
- Oxygen control system: Yes.
- Heavy liquid metal: Pb-Bi.

Figure 12.4.5. Flow diagram and photo of JBL3 loop

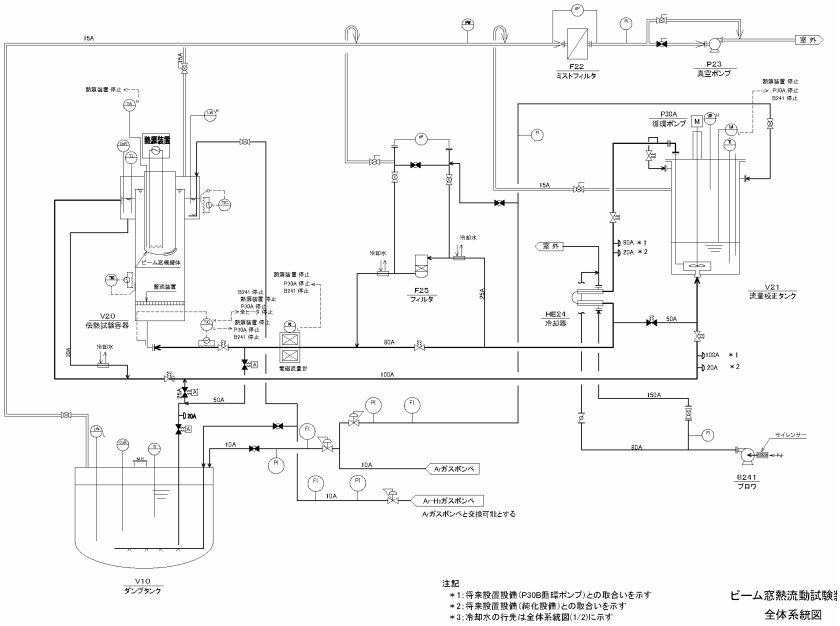

Figure 12.4.6. Scheme and photo of MES

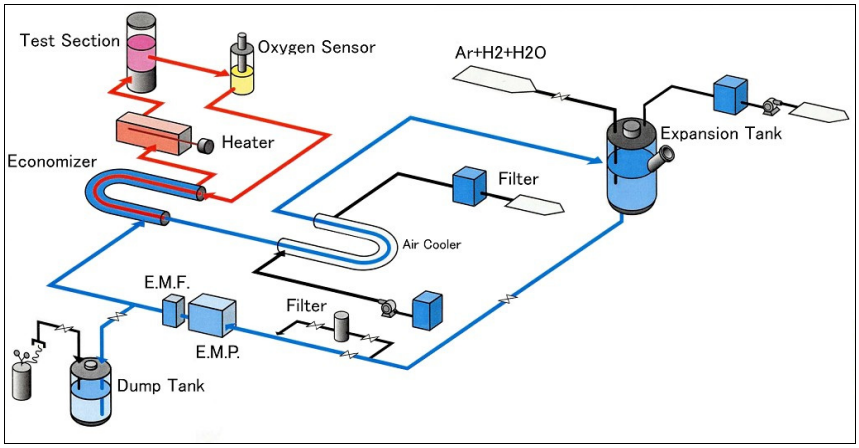

Facility: CRIEPI Pb-Bi Test Loop on Thermal-hydraulics – *Figure 12.4.7*

CRIEPI, Japan

Objectives:

- Heat transfer characteristics of Pb-Bi.
- Gas lift pump performance in Pb-Bi.
- Flow characteristics of Pb-Bi/gas two phase flow.

Operational parameters:

- Maximum temperature: 300°C.
- Maximum pressure: 0.5 MPa.
- Maximum flow rate: 6 m^3/h.
- Total electric power supply: 160 KVA.
- Number of heaters and control: 30 (PID controlled).
- Maximum heater power: 5 KVA.
- Diameter of main piping: 2 inches.
- Oxygen control system: No.

Facility: Wisconsin Tantalus Facility – *Figure 12.4.8*

UW, USA

Objectives:

- Multi-phase flow, heat transfer and flow stability/oscillations of steam/water injection into liquid metal.

Operational parameters:

- Maximum temperature: 550°C.
- Minimum temperature: 400°C.
- Maximum (typical) flow rate: 1-10 gram/sec.
- Electrical power: 30 kW.
- Number of test sections: 2 with multiple injectors.
- Heavy liquid metal: Pb and PbBi.

Figure 12.4.7. Schematic and photo of CRIEPI Pb-Bi Test Loop on Thermal-hydraulics

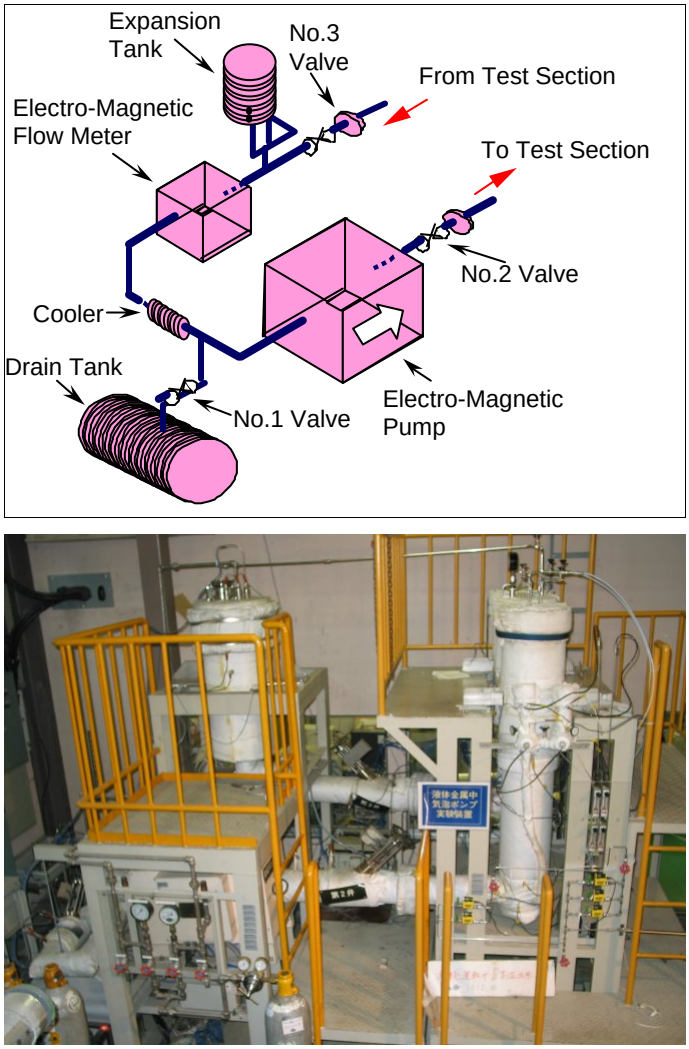

Figure 12.4.8. Schematic and photo of the Wisconsin Tantalus Facility

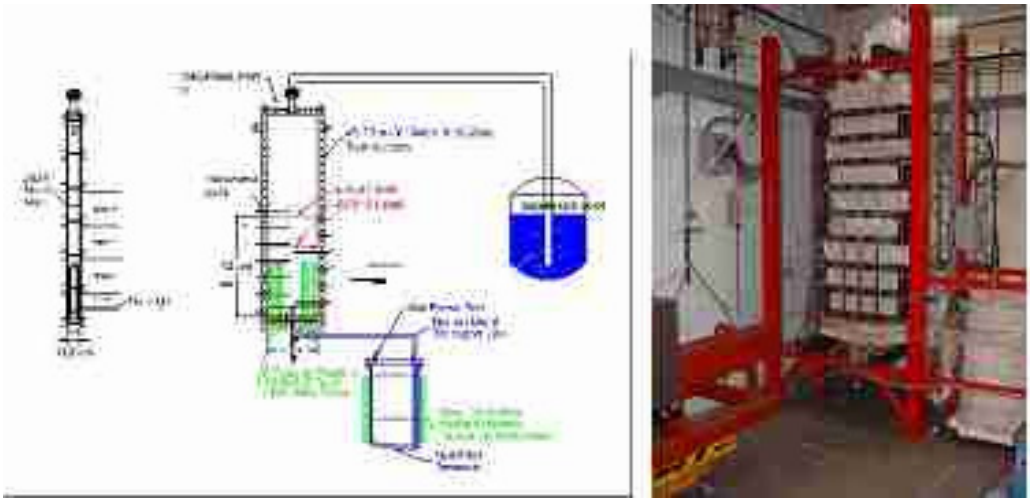

Facility: **Heavy Eutectic Liquid Metal Loop for Investigation of Operability and Safety (HELIOS)** ***Figure 12.4.9***

Seoul National University (SNU), Korea

Objectives:

- Verification of the natural circulation capability in PEACER-300 (transmutation reactor), corrosion testing and oxygen sensor development.

HELIOS is going to be completed at the end of 2004. Materials corrosion tests are planned for 2005 and the natural circulation tests for 2006.

Design parameters of PEACER-300/HELIOS:

- Reactor thermal power (kW): 850000/60.
- Reactor vessel height (cm):1400/1000.
- Reactor vessel diameter (cm): 700/5.0.
- Fuel rod active length (cm): 50/50.
- Number of fuel rods: 63433/4.
- Steam generator tube height (cm): 500/500.
- Primary loop pipe inner diameter (cm): 200/5.
- Pb-Bi coolant weight (tonne): –/1.8.
- Total flow (kg/sec): 58,059/10 max.
- Maximum flow speed (cm/sec): 200/200.
- Core exit temperature (C): 400/400.
- Core inlet temperature (C): 300/300.
- Elevation difference between core centre and steam generator centre (m): 8/8.

Facility*: Lead-bismuth Water Direct Contact Boiling Two-phase Flow Apparatus – *Figure 12.4.10

Research Laboratory for Nuclear Reactors, Tokyo Institute of Technology, Japan

Objectives:

- Operation technique of steam gas lift pump type Pb-Bi-cooled fast reactor.
- Thermal-hydraulics of Pb-Bi-water direct contact boiling flow.

Operational parameters:

- Maximum Pb-Bi temperature: 460°C.
- Steam temperature: 296°C.
- System pressure: 7 MPa.
- Pb-Bi flow rate: 33840 kg/h.
- Steam-water flow rate: 250 kg/h.
- Heater bundle power: 133 kW.
- Number of test sections: 1.
- Length of test section: 7 m.
- Oxygen control system (OCS): Yes (hydrogen-dissolved water).
- Heavy liquid metal: Pb-Bi eutectic.
- Pb-Bi inventory: 1000 kg.
- Water inventory: 50 kg.

Figure 12.4.9. 3-D CAD drawing (a), side-view photograph (b) and design schematic (c) of HELIOS at Seoul National University

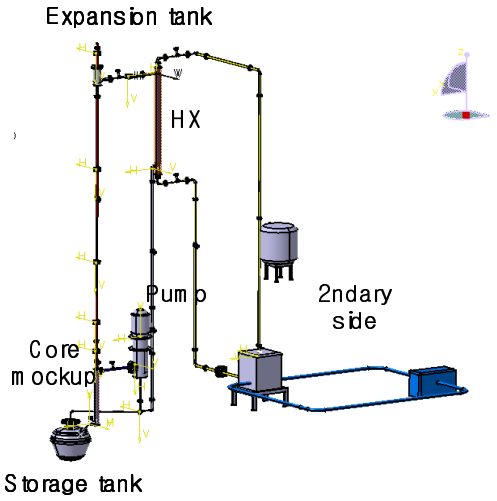

(a)

(b)

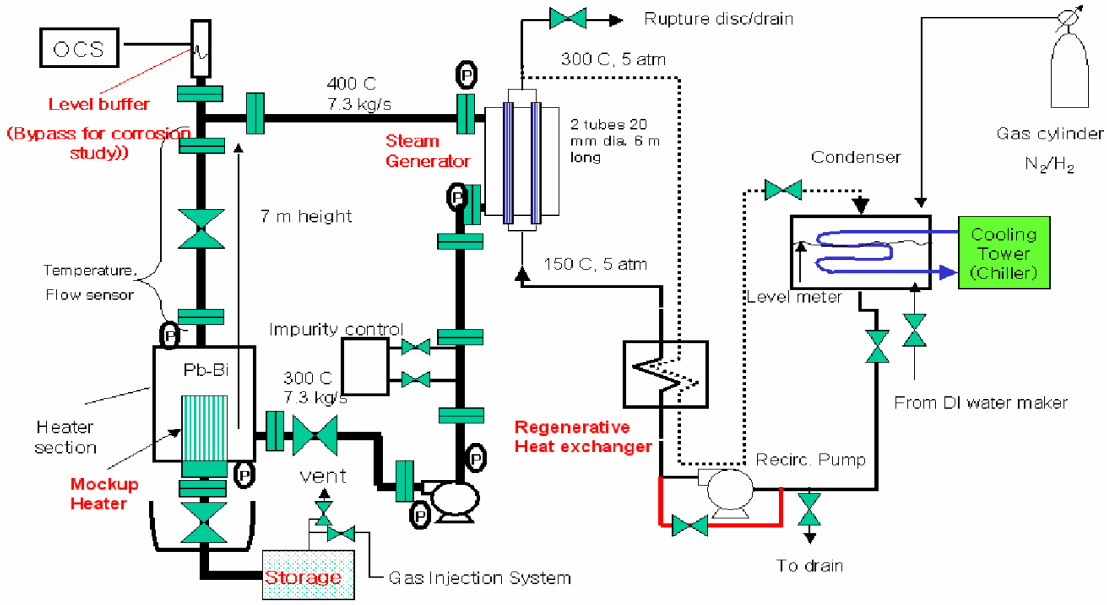

(c)

Figure 12.4.10. Flow diagram and photo of the Lead-bismuth-Water Direct Contact Boiling Two-phase Flow Apparatus at TIT

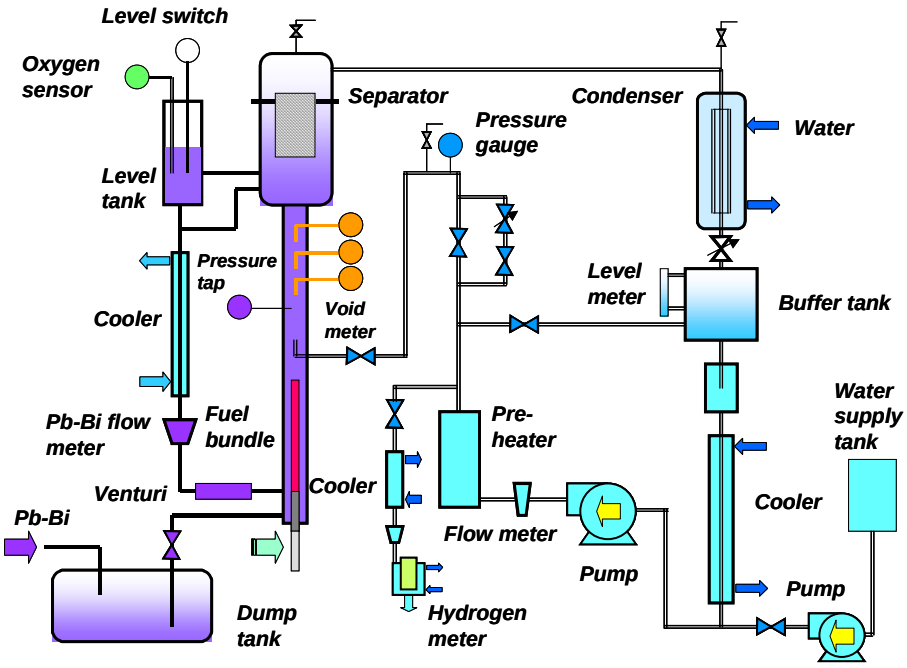

Table 12.1. Summary of the international heavy liquid metal test facilities

Association/ country	Name of the facility	Type of facility	Objectives	OCS – O_2 probe	Tmax	Flow rate	Other information	CP*
Technological facilities								
FZK/D	THESYS	Loop	Development and testing of measurement techniques	H_2/H_2O – yes	550°C	3.5 m^3/h	Heated pipe experiment Heated rod experiment	1
FZK/D	KOKOS	Loop	OCS development	H_2/H_2O – yes	550°C		Diffusion coefficient measurement of oxygen in LBE	3
FZK/D	KOSIMA	Static	Oxygen sensor development and calibration	H_2/H_2O – yes		–		2
ENEA/I	CHEOPE II	Loop	Liquid metal chemistry		500°C		50 l of LBE	4
CEA/F	SOLDIF	Static	Solubilities, diffusivities, oxide layer characterisation	? – yes	500°C	–		5
CEA/F	STELLA	Loop	Oxygen sensor and dip sampling system validation, OCS development	PbO – yes	550°C	1 m^3/h		6
SCK•CEN/BE	PCV	Stirring	Conditioning and cleaning procedures of LBE and LBE outgas studies	H_2/H_2O	500°C		Studies suitable for windowless spallation target	8
SCK•CEN/BE	VICE	Stirring	Gas transport in the beam line, outgas, metal evaporation, simulation of spallation products		500°C		Main operating pressure 10^{-7} mbar. Studies devoted to the windowless solution.	8
LANL/USA	DELTA	Loop	Corrosion tests in flowing LBE, corrosion/precipitation and system kinetics models, oxygen sensors and control systems, thermal-hydraulics experiments, components testing, data acquisition and control systems	Yes	550°C	2-5 m/s		12
LANL-UNLV/ USA	LCS	Loop	Transfer and extend LBE technology to higher-temperature Pb	Yes	700°C	0.25 m/s	ODS steel (MA956) construction	12
UNL/USA	TC-1	Target	Long-term sustained operation of MHD pump for LBE loop; examine long-term performance of target systems under non-irradiation	–	TBD (300°C @ pump inlet)	TBD (15 m^3/h)	–	19
JAERI/JP	JLBL-1	Loop	Corrosion studies and development of flow measurement techniques	H_2/H_2O	450°C	18 l/min	Two test sections	14

* CP = contact persons for the facilities. CP are listed at the end of the chapter.

Table 12.1. Summary of the international heavy liquid metal test facilities (*cont.*)

Association/ country	Name of the facility	Type of facility	Objectives	OCS – O_2 probe	Tmax	Flow rate	Other information	CP*
MES/JP	MES-LOOP2001	Loop	Coolant purification, thermal-hydraulic and corrosion tests	H_2/H_2O – yes sensor	550°C	15 l/min		16
TIT/JP	Steam Injection and OCC	Apparat.	Oxygen sensor, oxygen potentials in Pb-Bi, Pb-Bi mist and impurities into steam flow, dissolved H_2 in steam and water chemistry and transport of metal elements in Pb-Bi	H_2/H_2O – yes sensor	500°C			25
Materials testing facilities								
FZK/D	COSTA	Static	Corrosion mechanism investigation in controlled conditions	H_2/H_2O – in the gas phase	1000°C	-	200 specimens at 5 different T and 10 different O_2 activities in one run	3
FZK/D	CORRIDA	Loop	Corrosion rate in controlled atmosphere	H_2/H_2O – yes	550°C	2-4 m/s	Modelling of corrosion precipitation behaviour	2
ENEA/I	CHEOPE III	Loop	Corrosion at high oxygen content	H_2/O_2 – yes	500°C	1.2 m^3/h	50 l of LBE	4
ENEA/I	LECOR	Loop	Corrosion at low oxygen content, physico-chemistry, component testing	H_2/O_2 – yes	500°C	4.5 m^3/h	Three test sections	4
LANL/USA	DELTA	Loop	Corrosion tests in flowing LBE, corrosion/precipitation and system kinetics models, oxygen sensors and control systems, thermal-hydraulics experiments, components testing, data acquisition and control systems	Yes	550°C	2-5 m/s		12
LANL-UNLV/ USA	LCS	Loop	Transfer and extend LBE technology to higher temperature Pb, corrosion tests in flowing Pb	Yes	700°C	0.25 m/s	ODS steel (MA956) construction	12
CEA/F	COLIMESTA	Static	Effect of oxygen content on the corrosion mechanism	Yes – yes	500°C			5
CEA/F	CICLAD	Rotating cylinder	Hydrodynamic effect on corrosion rate	H_2/H_2O – yes	500°C	5 m/s	Development of corrosion mechanism	5
PSI/CH	LISOR	Loop	"Stress" corrosion under irradiation	No	350°C	1 m/s	Proton beam: 72 MeV, 15-40 μA	7
PSI/CH	CorrWett	Loop	Corrosion, thermal cycling	No	350°C	0.8 m/s		7

* CP = contact persons for the facilities. CP are listed at the end of the chapter.

Table 12.1. Summary of the international heavy liquid metal test facilities (*cont.*)

Association/ country	Name of the facility	Type of facility	Objectives	OCS – O_2 probe	Tmax	Flow rate	Other information	CP*
SCK•CEN/BE	SSRT/ stagnant	Static	LBE and irradiation on mechanical properties of structural materials, studies on OCS and O_2 measurement	Yes	500°C	–	One test section in autocave with 2.5 l of LBE	9
CIEMAT/ES	FEDE	Static	Materials testing in controlled conditions and O_2 measurement	Yes	600°C	–	Different gas atmospheres and different O_2 activities, multi-specimen device	10
CIEMAT/ES	FELIX	Static	Materials testing	H_2/H_2O	600°C	–	Furnaces with controlled atmosphere	10
CIEMAT/ES	CIRCO	Loop	Long-term corrosion experiments and oxygen sensor testing	Yes	550°C	Natural convec.	Analysis of corrosion products deposition could be performed by destructive examination of the loop	10
CIEMAT/ES	LINCE	Loop	Long-term corrosion experiments and oxygen control system analysis	Yes	500°C	2.5 m^3/h	LBE inventory 170 l, electrical power 80 kW	10
JAERI/JP	JLBS	Static	Compatibility of materials	OCS partially	600°C	–		13
JAERI/JP	JLBL-1	Loop	Corrosion studies and development of flow measurement techniques	H_2/H_2O	450°C	18 l/min	Two test sections	14
CRIEPI/JP	PbBi static corrosion	Static	Behaviour of static corrosion in Pb-Bi	Yes	700°C	–		15
MES/JP	MES-LOOP2001	Loop	Coolant purification, thermal-hydraulic and corrosion tests	H_2/H_2O – yes sensor	550°C	15 l/min		16
KAERI/KR	Not named	Loop	OCS, corrosion, thermal-hydraulics	Yes OCS yes sensor	550°C	3.6 m^3/h		17
SNU/KR	HELIOS	Loop	OCS, materials and thermal-hydraulics (natural circulation capabilities in PEACER-300)	Yes OCS	450°C	200 cm/s	HELIOS has been designed by thermo-hydraulics scaling of PEACER-300	23
ŘEŽ/CZ	COLONRI I	Loop	Corrosion in different conditions	OCS indirectly	700°C	1-2 cm/s		18
ANL/USA	Natural convection quartz harp	Loop	Long-term corrosion in Pb/LBE; thermo-mechanical behaviour between materials and Pb/LBE	H_2/H_2O	800°C	0.01 m/s	–	20

* CP = contact persons for the facilities. CP are listed at the end of the chapter.

Table 12.1. Summary of the international heavy liquid metal test facilities (*cont.*)

Association/ country	Name of the facility	Type of facility	Objectives	OCS – O_2 probe	Tmax	Flow rate	Other information	CP*
MIT/US	H.H. Uhlig Corrosion Lab	Static/ rotating disc	Corrosion mechanism, benchmarking corrosion/precipitation; oxygen sensors	O_2/He; H_2/He; H_2/H_2O	800°C	0-3 m/s	The liquid metal is contained in a ZrO_2 crucible, capability of the crucible is 4 L	21
UnivLILLE/F	Mechanical Properties in Liquid Metals	Static	Monotonic and cyclic properties of structural alloys in liquid metals	No	600°C	Static		24
TIT/JP	LBE Corrosion	Loop	Material corrosion in flowing Pb-Bi, oxygen control technique, oxygen sensor, electromagnetic flow meter, ultrasonic flow meter	PbO Yes sensor	550°C	0.36 m^3/h		25
SCK•CEN/B	LIMEST 1	Static	Mechanical testing of materials and oxide layers in LBE	Ar/H2 Yes	500°C	Static	Calibration of oxygen sensors also foreseen	26
SCK•CEN/B	LIMEST 2	Static	Mechanical testing of irradiated materials in LBE	Ar/H2	500°C	Static	SSRT, constant and raising load, CGR	27
Thermal-hydraulics facilities								
FZK/D	THEADES	Loop	Single effects, beam window, window less, fuel elements, heat transfer	H_2/H_2O – yes	450°C	100 m^3/h	Height of the test sections 3.4 m	1
ENEA/I	CIRCE	Pool	Thermal-hydraulics, component development, large-scale exp. and liquid metal chemistry in pool config.	OCS yes – no O_2 probe	450°C		8540 l of LBE	4
ENEA/I	CHEOPE I	Loop	Thermal-hydraulics, cooling pin		500°C		900 l of LBE	4
RIT/SE	TALL	Loop	Thermal-hydraulics and heat transfer measurements	No OCS – yes sensor	550°C	2.5 m^3/h	Height of the test section: 6.8 m	11
JAERI/JP	JLBL-2	Loop	Flow studies in horizontal LBE target	No	<450°C	50 l/min	Proof test of target – I	14
JAERI/JP	JLBL-3	Loop	Thermal-fluid test loop	Yes	450°C	500 l/min	Collaboration with MES	28
CRIEPI/JP	Pb-Bi Thermal-hydraulics	Loop	Heat transfer characteristics of Pb-Bi, gas lift pump performance in Pb-Bi flow characteristics of Pb-Bi/gas two-phase flow	No	300°C	6 m^3/h		15

* CP = contact persons for the facilities. CP are listed at the end of the chapter.

Table 12.1. Summary of the international heavy liquid metal test facilities (*cont.*)

Association/ country	Name of the facility	Type of facility	Objectives	OCS – O_2 probe	Tmax	Flow rate	Other information	CP*
LANL/US	DELTA	Loop	Corrosion tests in flowing LBE, corrosion/precipitation and system kinetics models, oxygen sensors and control systems, thermal-hydraulics experiments, components testing, data acquisition and control systems	Yes	550°C	2-5 m/s		12
UW/US	Wisconsin Tantalus facility	Loop	Multi-phase flow, heat transfer and flow stability/oscillations of steam/water injection into Pb/LBE	–	550°C	1-10 g/sec		22
KAERI/KR	Not named	Loop	OCS, corrosion, thermal-hydraulics	Yes OCS – yes sensor	550°C	3.6 m^3/h		17
SNU/KR	HELIOS	Loop	OCS, materials and thermal-hydraulics (natural circulation capabilities in PEACER-300)	Yes OCS	450°C	200 cm/s	HELIOS was designed by thermo-hydraulics scaling of PEACER - 300	23
TIT/JP	LBE-H_2O Direct Contact	Appar.	Operation technique of steam gas lift pump type Pb-Bi-cooled fast reactor, thermal-hydraulics of Pb-Bi-water direct contact boiling flow		460°C	33.8 kg/h		25

* CP = contact persons for the facilities. CP are listed at the end of the chapter.

Contact persons

[1] Dr. Robert Stieglitz
Institute for Nuclear and
Energy Technologies (IKET)
FZK
Tel: +49 (0) 7247 / 82 3462
Fax: +49 (0) 7247 / 82 4837
Eml: robert.stieglitz@iket.fzk.de

[2] Dr. Juergen Konys
Institute for Materials Research III (IMF III)
FZK
Tel: +49 (0) 7247 / 82 3720
Fax: +49 (0) 7247 / 82 3956
Eml: juergen.konys@imf.fzk.de

[3] Dr. Georg Mueller
Institut für Hochleistungsimpuls und
Mikrowellentechnik (IHM)
FZK
Tel: +49 (0) 7247 / 82 4669
Fax: +49 (0) 7247 / 82 2256
Eml: georg.Mueller@ihm.fzk.de

Cc to:

Dr. Joachim U. Knebel
Head
Programme Nuclear Safety Research
(NUKLEAR)
Tel: +49 (0) 7247 / 82 5510
Fax: +49 (0) 7247 / 82 5508
Eml: joachim.knebel@psf.fzk.de

[4] Dr. Antonio Aiello
UTS Tecnologie Fisiche Avanzate –
Sezione di Ingegeria Sperimentale (FIS ING)
ENEA
Tel: +39 0534 / 801380
Fax: +439 0534 / 801250
Eml: antonio.aiello@brasimone.enea.it

Cc to:

Dr. Gianluca Benamati
UTS Tecnologie Fisiche Avanzate –
Sezione di Ingegeria Sperimentale (FIS ING)
Head, Experimental Engineering Section
ENEA
Tel: + 39 0534 / 801423
Fax: + 39 0534 / 801250
Eml: gianluca.benamati@brasimone.enea.it

[5] Dr. Fanny Balbaud
DEN/DPC/SCCME/LECNA
CEA
Tel: +33 (0)1 69 08 16 51
Fax: +33 (0)1 69 08 15 86
Eml: fanny.balbaud@cea.fr

[6] J-Louis Courouau
DEN/DER/STR/LCEP
CEA
Tel: +33 (0)4 42 25 32 66
Fax: +33 (0)4 42 25 72 87
Eml: jean-louis.courouau@cea.fr

Cc to:

Dominique Warin
Head
Programme Nuclear Waste Toxicity Reduction
DEN/DDIN/FITRA
CEA
Tel: +49 (0) 7247 / 82 5510
Fax: +49 (0) 7247 / 82 5508
Eml: Dominique.warin@cea.fr

[7] Dr. Heike Glasbrenner
Spallation Neutron Source Division (ASQ)
PSI
Tel: +41 (0) 56 310 4712
Fax: +41 (0) 56 310 3131
Eml: heike.glasbrenner@psi.ch

Cc to:

Dr. Friedrich Gröschel
Head
MEGAPIE Project
PSI
Tel: +41 (0) 56 310 2196
Fax: +41 (0) 56 310 3131
Eml: friedrich.groeschel@psi.ch

[8] Dr. Paul Schuurmans
Reactor Physics and MYRRHA Department
SCK•CEN
Tel: +32 (0) 14 / 33 22 93
Fax: +32 (0) 14 / 32 15 29
Eml: Paul.Schuurmans@sckcen.be

Cc to:

Dr. Hamid Aït Abderrahim
Head
Reactor Physics and MYRRHA Department
SCK•CEN
Tel: +32 (0) 14 / 33 22 77
Fax: +32 (0) 14 / 32 15 29
Eml: Haitabde@sckcen.be

[9] Danislav Sapundjiev
Reactor Materials Research Department
SCK•CEN
Tel: (+32) 14 33 34 15
Fax: (+32) 14 32 13 36
Eml: dsapundj@sckcen.be

[10] Dr. Dolores Gomez-Briceno
Materials Project Head
CIEMAT
Tel: +34 91 3466605
Fax: +34 91 3466661
Eml: lola.gomezbriceno@ciemat.es

[11] Dr. Weimin Ma, Dr. Aram Karbojian
Division of Nuclear Power Safety
KTH
Tel: +46-8-790 92 54
Fax: +49-8-790 91 97
Eml: ma@egi.kth.se, aram@egi.kth.se

Cc to:

Prof. Bal Raj Sehgal
Head
Nuclear Power Safety Division
KTH
Tel: +49-8-790 9252
Fax: +49-8-790 9197
Eml: sehgal@egi.kth.se

[12] Dr. Ning Li
Lead-alloys Technology Development
AFCI/Gen IV
Tel: +1 505 665 6677
Fax: +1 505 667 7443
Eml: ningli@lanl.gov

Cc to:

Mr. Michael W. Cappiello
Program Manager
AFCI-LANL
Tel: +1 505 665 6408
Fax: +1 505 667 7443
Eml: mcappiello@lanl.gov

[13] Dr. Yuji Kurata
Center for Proton Accelerator Facilities
JAERI
Tel: +81 (0) 29 / 282 5059
Fax: +81 (0) 29 / 282 6487
Eml: ykurata@popsvr.tokai.jaeri.go.jp

[14] Dr. K Kikuchi
Center for Proton Accelerator Facilities
JAERI
Tel: +81 (0) 29 / 282 5058
Fax: +81 (0) 29 / 282 6489
Eml: kikuchi@ popsvr.tokai.jaeri.go.jp

[15] Dr. Yoshihisa Nishi
Central Research Institute of
Electric Power Industry (CRIEPI)
Komae Research Laboratory
Nuclear Energy Systems Department
Tel: +81 3 3480-2111
Fax: +81 3 3480 2493
Eml: y-nishi@criepi.denken.or.jp

Cc to:

Dr. Izumi Kinoshita
Central Research Institute of
Electric Power Industry (CRIEPI)
Komae Research Laboratory
Nuclear Energy Systems Department
Tel: +81 3 3480-2111
Fax: +81 3 3480 2493
Eml: kinosita@criepi.denken.or.jp

[16] Mr. Teruaki Kitano
Engineering Department
Nuclear Energy Systems Division
Mitsui Engineering and Shipbuilding Co., Ltd.
Tel: 03-3675-7286
Fax: 03-3675-7129
Eml: kitano@mes.co.jp

Cc to:

Mr. Kin-ya Kamata
Tamano Technology Center
Technical Research & Development HQ
Mitsui Engineering and Shipbuilding Co., Ltd.
Tel: +81-863-31-9613
Fax: +81-863-31-4819
Eml: kama@mj.mes.co.jp

[17] Dr. C.H. Cho
HYPER Team
KAERI
Tel: +82 - 42-868-2914
Fax: +82 - 42-868-2080
Eml: chcho@kaeri.re.kr

Cc to:

Dr. T.Y. Song
HYPER Team
KAERI
Tel: +82 - 42-868-8924
Fax: +82 - 42-868-2080
Eml: tysong@kaeri.re.kr

[18] Dr. Anna Brožová
Div. of Integrity and Technical Engineering
Dept. of Structural Properties and Corrosion
Řež
Tel: (+420-2) 6617 3432
Fax: (+420-2) 2094 0519
Eml: bro@ujv.cz

Cc to:

Dr. Dalibor Kárník
Div. of Integrity and Technical Engineering
Dept. of Structural Properties and Corrosion
Řež
Tel: (+420-2) 6617 2617
Fax: (+420-2) 2094 0519
Eml: kar@ujv.cz

[19] Dr. Anthony Hechanova
Harry Reid Center for Environmental Studies
University of Nevada, Las Vegas
Tel: +1 702-895-1457
Fax: +1 702-895-3094
Eml: Hechanova@unlv.nevada.edu

[20] Dr. Jude Mary Runge
Chemical Engineering Division
Argonne National Laboratory
Tel: +001 630-252-3430
Fax: +001 630-252-9917
Eml: runge@cmt.anl.gov

Cc to:

Dr. Douglas Crawford
Argonne National Laboratory
Tel: +001 208-533-7456
Fax:
Eml: douglas.crawford@anl.gov

[21] Professor Ronald G. Ballinger
Dept. of Nuclear Engineering
Dept. of Materials Science and Engineering
H.H. Uhlig Corrosion Laboratory
Massachusetts Institute of Technology
Tel: +1 617·253·5118
Fax: +1 617 253 0807
Eml: hvymet@mit.edu

[22] Dr. Michael Corradini
Engineering Physics
University of Wisconsin
Tel: 608-263-1648
Fax: 608-263-7451
Eml: Corradini@engr.wisc.edu

[23] Prof. Il Soon Hwang
Nuclear Materials Laboratory
Nuclear Engineering Department
Associate Director
Nuclear Transmutation Energy Research
Center of Korea (NUTRECK)
Tel: +82-2-880-7215
Fax: +82-2-889-2688
Eml: hisline@snu.ac.kr

[24] Prof. Jean-Bernard Vogt
Laboratoire de Métallurgie Physique et
Génie des Matériaux (LMPGM)
Université des Sciences et
Technologies de Lille (USTL) UMR CNRS 8517
Tel: +33 (0)3 20 43 40 35
Fax: +33 (0)3 20 43 40 35
Eml: jean-bernard.vogt@univ-lille1.fr

Cc to:

Dr. Ingrid Serre
Laboratoire de Métallurgie Physique et
Génie des Matériaux (LMPGM)
Université des Sciences et
Technologies de Lille (USTL) UMR CNRS 8517
Tel: +33 (0)3 20 43 66 06
Fax: +33 (0)3 20 33 61 48
Eml: ingrid.serre@univ-lille1.fr

[25] Professor Minoru Takahashi
Research Laboratory for Nuclear Reactors
Tokyo Institute of Technology
Tel:
Fax:
Eml: mtakahas@nr.titech.ac.jp

[26] Danislav Sapundiev
Reactor Materials Research Department
SCK•CEN
Tel: (+32) 14 33 34 15
Fax: (+32) 14 32 13 36
Eml: dsapundj@sckcen.be

Cc to:

Abdou Al Mazouzi
Reactor Materials Research Department
SCK•CEN
Tel: (+32) 14 33 30 96
Fax: (+32) 14 32 12 16
Eml: aalmazou@sckcen.be

[27] Rik Wouter Bosch
Reactor Materials Research Department
SCK•CEN
Tel: (+32) 14 33 34 17
Fax: (+32) 14 32 13 36
Eml: rik-wouter.bosch@sckcen.be

Cc to:

Abdou Al Mazouzi
Reactor Materials Research Department
SCK•CEN
Tel: (+32) 14 33 30 96
Fax: (+32) 14 32 12 16
Eml: aalmazou@sckcen.be

[28] Dr. K. Kikuchi
Japan Atomic Energy Agency (JAEA)
Tel: +81 29 282 5058
Fax: +81 29 282 6489
Eml: kikuchi.kenji21@ jaea.go.jp

Cc to:

Dr. M. Ono
Tel: +81 3 3675 7354
Fax: +81 3 3675 7129
Eml: ono@mes.co.jp