Thermal-hydraulic study of natural convection in the heavy eutectic liquid metal loop HELIOS, benchmark results on lead-alloy-cooled advanced nuclear energy system (LACANES)

Abdalla Batta[1], Andreas Class[1], Jae Hyun Cho[2], Il Soon Hwang[2], Paride Meloni[3], Francesco Saverio Nitti[3], Massimiliano Polidori[3], Vincenzo Casamassima[4], Yong Joon Choi[5]

[1]Karlsruhe Institute of Technology, Germany, [2]Seoul National University, Republic of Korea, [3]Italian National Agency for New Technologies, Energy and Sustainable Economic Development, Italy, [4]Ricerca sul Sistema Energetico / Power Generation Systems Department, Italy, [5]OECD/NEA, France

Abstract

Liquid lead-bismuth eutectic (LBE) has been extensively investigated worldwide because of its low melting temperature, high boiling temperature, chemical stability and neutron transparency. The study of the natural convection heat transfer of liquid metals is becoming very important for the safety of next generation nuclear reactors. Design tools validation like system codes and computational fluid dynamic (CFD) models require reliable experimental data. Under the guidance of the Nuclear Science Committee (NSC) and the mandate of the Working Party on Scientific Issues of the Fuel Cycle (WPFC), the Task Force on the Benchmarking of Thermal-Hydraulic Loop Models for Lead-Alloy-Cooled Advanced Nuclear Energy Systems (LACANES) has been created. One of the objectives of this WPFC is the validation of thermal-hydraulic loop models for application to LACANES design analysis in participating organisations, by benchmarking with a set of well-characterised lead-alloy coolant loop test data. Other objectives are the establishment of guidelines for quantifying thermal-hydraulic modelling parameters related to friction and heat transfer by lead-alloy coolant and the identification of specific issues, either in modelling and/or in loop testing. The Heavy Eutectic liquid metal Loop for Integral test of Operability and Safety of PEACER (HELIOS) constructed at Seoul National University of the Republic of Korea in 2005, is considered for benchmarking purposes. The 12 m tall loop is driven by natural convection induced by heating of the core at the lower level of the loop and removing of the gained head at the heat exchanger in the upper part of the loop. In the natural convection case the pump is not activated. A bypass pipe is connected between the core inlet and the loop cold leg downstream of the heat exchanger. The temperature values are measured at different locations of the loop. Mass flow rate is also measured. Steady and unsteady operation conditions and data are generated. In the current study results obtained by CFD and system codes are presented for steady natural convection case.

Introduction

The design of next generation nuclear reactors which utilize liquid metals as coolant as well as a spallation source encouraged extensive investigation worldwide of the thermal hydraulic of liquid metals. The Nuclear Science Committee (NSC) and the mandate of the Working Party on Scientific Issues of the Fuel Cycle (WPFC) have started a task force on the benchmarking of thermal-hydraulic loop models for Lead-Alloy Cooled Advanced Nuclear Energy Systems (LACANES). The objectives of this WPFC are the validation of thermal-hydraulic loop models for application to LACANES design analysis in participating organisations, establishment of the guidelines for quantifying thermal-hydraulic modelling parameters related to friction and heat transfer by lead-alloy coolant and identification of specific issues in modelling and/or in loop testing. A set of well-characterised lead-alloy coolant loop test data is necessary to achieve the former objective. Data from the Heavy Eutectic liquid metal Loop for Integral test of Operability and Safety (HELIOS) were selected for benchmarking. The loop was constructed at Seoul National University (SNU) of the Republic of South Korea in 2005 for the integral test of operability and safety of the innovative reactor PEACER (Proliferation-resistant, environment-friendly, accident-tolerant, continuable and economical reactor). Fig.1 shows the HELIOS main loop components, thermocouples monitoring LBE temperature and the accumulated length. Eight side heaters (LHR02-LHR09) are used to compensate for the heat losses in the loop. They are placed as shown in Figure1.

Figure 1: HELIOS Loop, showing main loop components, thermocouples monitoring LBE temperature and accumulated length

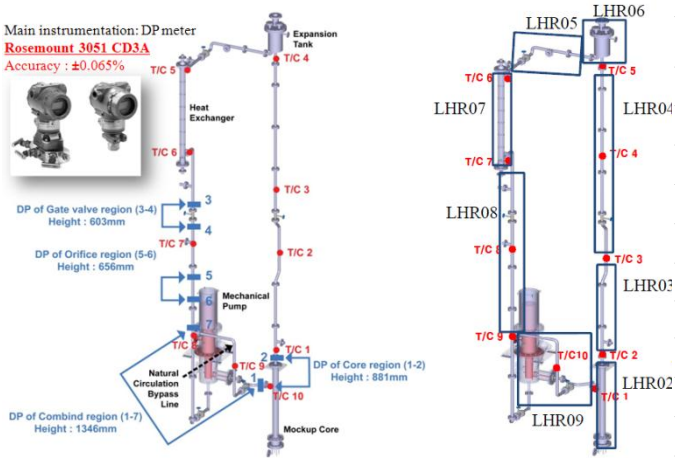

Thermocouple	Location	Accumulated length (m)
T/C 01	Core inlet	0.00
T/C 02	Core outlet	3.72
T/C 03	Hotleg 1	6.54
T/C 04	Hotleg 2	9.47
T/C 05	Hotleg 3 (E/T inlet)	10.88
T/C 06	H/X inlet	14.32
T/C 07	H/X outlet	16.52
T/C 08	Coldleg 1	19.23
T/C 09	Coldleg 2	21.42
T/C 10	Coldleg 3	22.65

The LACANES benchmarking has two phases. In phase-I the isothermal steady-state forced convection case is studied and in phase II the non-isothermal natural convection case is considered. Figure 2 shows the overall procedure of the LACANES. Phase I is completed. Phase II is currently being considered. The results of phase I are presented in [1-3]. Figure 3 shows the results of different participants/codes used in phase I for pressure loss in the loop. As can be seen, there is a big difference in the calculated pressure losses. This is dealt with in phase I, where a best practice guideline for pressure loss coefficients of the loop components is defined. The participants of benchmark have utilised a unified pressure loss correlation for phase-II (the non-isothermal natural

convection case). In this way all codes predict similar pressure loss coefficients for the forced convection case. It is also important to note that the considered lower flow rates in the forced convection case are in the same range considered in the natural convection case.

Figure 2: Overall procedure of OECD/NEA LACANES benchmarking [2]

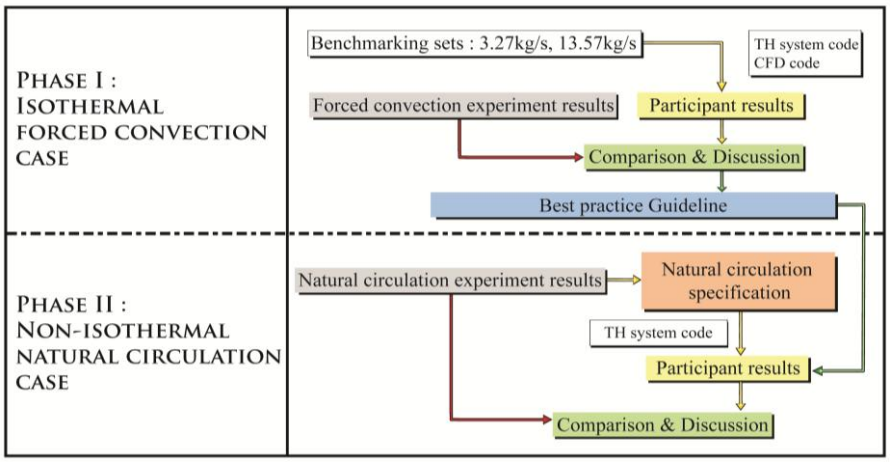

Figure 3: Accumulated length versus pressure loss for participant predictions using handbook correlation in high mass flow rate conditions (13.57 kg/s) [3]

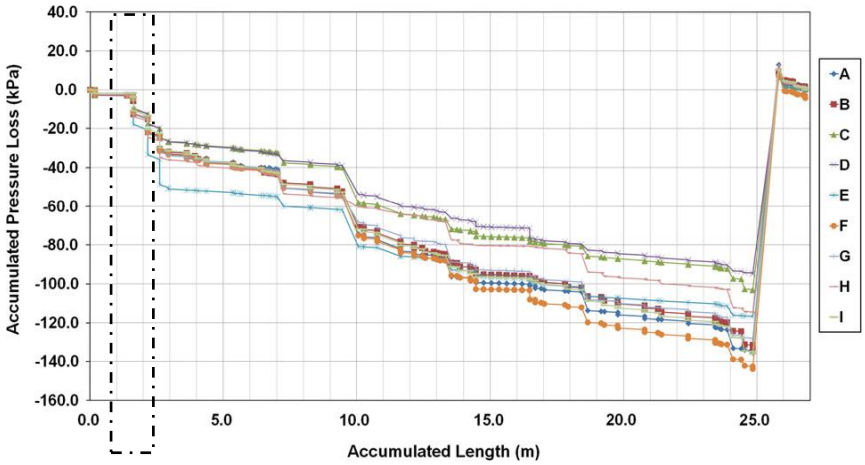

In the next sub-section the benchmark date and results obtained by different codes are presented. In addition, the results of the CFD study for core region are presented.

Benchmark data and results

Specifications for phase-II are prepared based on the natural circulation test. Thermal boundary conditions, temperature distributions and mass flow rate results are major parameters in the specification. Non-isothermal natural circulation will be simulated using thermal–hydraulic system codes. It is recommended that each thermal hydraulic system code uses the pressure loss coefficients suggested by the recommendations from

phase-I. Using the defined guide line correlations for pressure losses, the heat transfer characteristics of each thermal hydraulic system code were used in phase-II of LACANES benchmarking [2]. The benchmark compared the results of different participants for steady state natural convection case. Table 1 summarises the history of actions from start to steady state in the experimental test. Figure 4 shows the measured temperature. A summary of final steady state showing the active heater and their load, mass flow rates and some of the measured temperature is given in Table 2.

Table 1: History of actions from start to steady state in the experimental test

Date	Time		action		main heater	Oil RPM	Water
	from	to					
2012-02-14	4:40 PM		Change from NC line to FC line, 650rpm pumping		0kW	0	25
	8:41 PM	8:51 PM	Change from forced convection line to natural circulation line		18.3kW	400	25
			Main power: 18.3kW		18.3kW	400	25
			Oil flow rate: 400rpm		18.3kW	400	25
			Water temperature: 25°C		18.3kW	400	25
2012-02-15	12:43 PM		1.5kW	LHR3	18.3kW	400	25
			1.2kW	LHR5	18.3kW	400	25
	6:36 PM		Increase heat from 1.5kW to 2.5kW	LHR3	18.3kW	400	25
			Increase heat from 1.2kW to 1.8kW	LHR5	18.3kW	400	25
			0.9kW	LHR6	18.3kW	400	25
	11:36 PM		Increase heat from 1.8kW to 2.0kW	LHR5	18.3kW	400	25
			1.2kW	LHR4	18.3kW	400	25
2012-02-16	8:40 AM		Increase heat from 1.2kW to 2.6kW	LHR4	18.3kW	400	25
	2:07 PM		Increase heat from 2.5kW to 3.0kW	LHR3	18.3kW	400	25
			1.5kW	LHR8	18.3kW	400	25
2012-02-17	1:30 PM		Finalize		18.13kW	400	25

Figure 4: Results of final steady state with local heaters

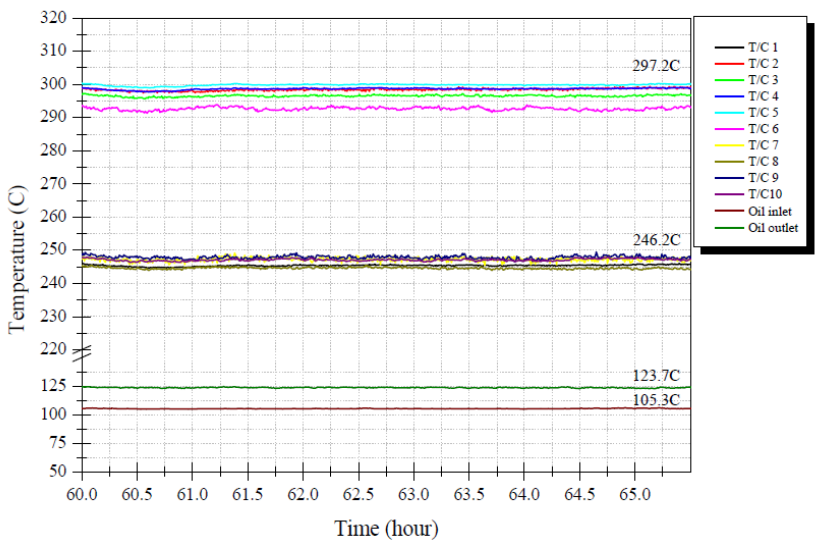

Table 2: Summary of final steady state

Primary loop: LBE	Core heat	18.3kW	
	Hotleg temperature	297.2°C	
	Coldleg temperature	246.2°C	
	Mass flow rate	2.54kg/s	
	Power of local surface heaters	LHR 3	3.0kW
		LHR 4	2.6kW
		LHR 5	2.0kW
		LHR 6	0.9kW
		LHR 8	1.5kW
Secondary loop: Oil, Dowtherm RP	Inlet/Outlet temperature	105°C/124°C	
	Mass flow rate	0.42kg/s	
Third loop: Water	Boundary temperature	25°C	

The available data indicate a high heat loss of the loop, which is compensated for by the side heaters. In this way near constant temperature in the cold and hot legs is maintained. The circulation in the loop is due to the added heat in the core, which is removed in the heat exchanger. Three system codes are tested. Their predicted temperature and mass flow rates are given in Table 3. The different codes used an oil inlet temperature of 105 and a heat load on the core of 18.3 kW as input data.

Table 3: Measured and predicted temperatures and mass flow rate

Accumulated length	Measured	MARS-LBE	Relap5	LEGO pst
0	244	278	252	285
3.72	298	328	306	333
6.54	297	328	306	333
9.47	299	328	306	333
10.88	300	328	306	333
14.32	293	328	306	333
16.52	247	278	252	285
19.23	245	278	252	285
21.42	248	278	252	285
22.65	247	278	252	285
24.78	244	278	252	285
Average temperature difference (K)	51	51	53	48
Mass flow rate (kg/s)	2.54	2.47	2.30	2.54
Oil inlet temperature	105	105	105	105
Oil outlet temperature	123.7	127.8	125.0	128.2

Considering the calculated temperature differences between hot-leg and cold-leg, one finds relatively good agreement. The predicted mass flow rate is within 10% accuracy. However, the computed absolute temperatures are not the same. The reason for this difference will be investigated in another study. The computed temperatures along the loop are compared with the experiment data in Figure 5. They show a qualitative agreement. One can find a very small difference between the results if they are presented based on the temperature difference between locally calculated and a reference temperature like core inlet temperature.

Figure 5: Comparison of measured and simulated temperature values (different codes)

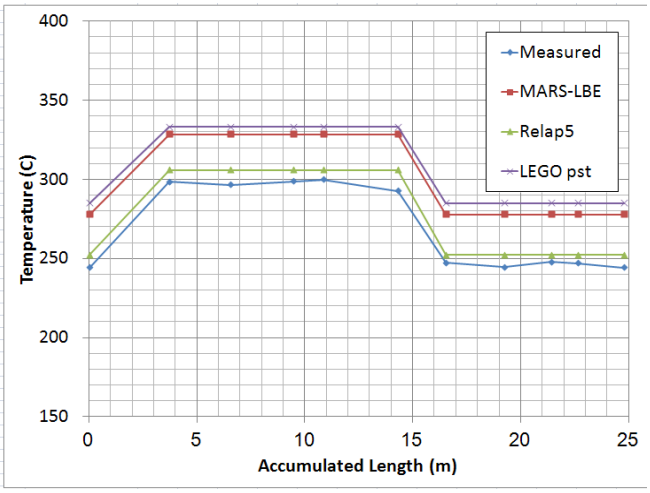

The predicted mass flow rate and temperature difference between hot-leg and cold-leg predicted by MARS-LBE are shown in Figure 6 as an example of the parametric studies conducted in this benchmark. Similar results have been obtained from other codes. The parametric study of MARS-LBE code considers main power, oil flow rate, oil inlet temperature, and Nusselts number of LBE as independent variables and hot-leg temperature, cold-leg temperature, LBE temperature difference, and LBE flow rate as dependent variables.

Figure 6: Prediction of final steady state using MARS-LBE results

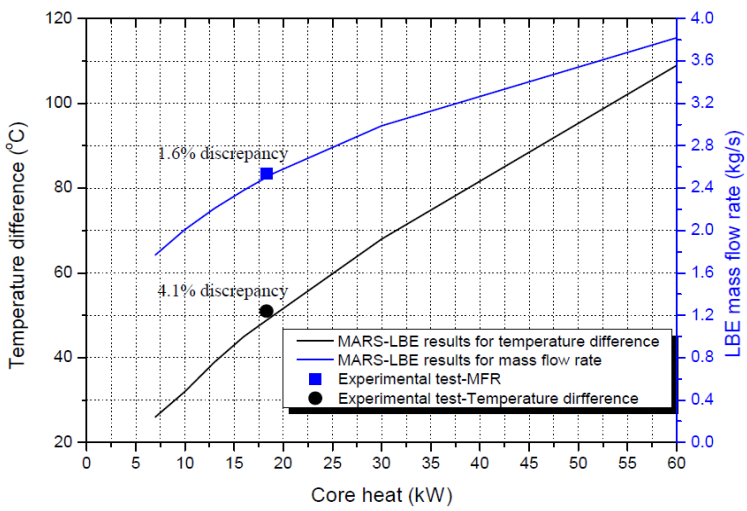

Thermal hydraulic study of core

Forced convection benchmark results (Figure 3) have shown the big impact of the core pressure drop calculation on the different benchmarked results. Figure 7 illustrates the flow path in the core and gives the geometrical dimensions.

Figure 7: Core geometry and heated section of core heaters

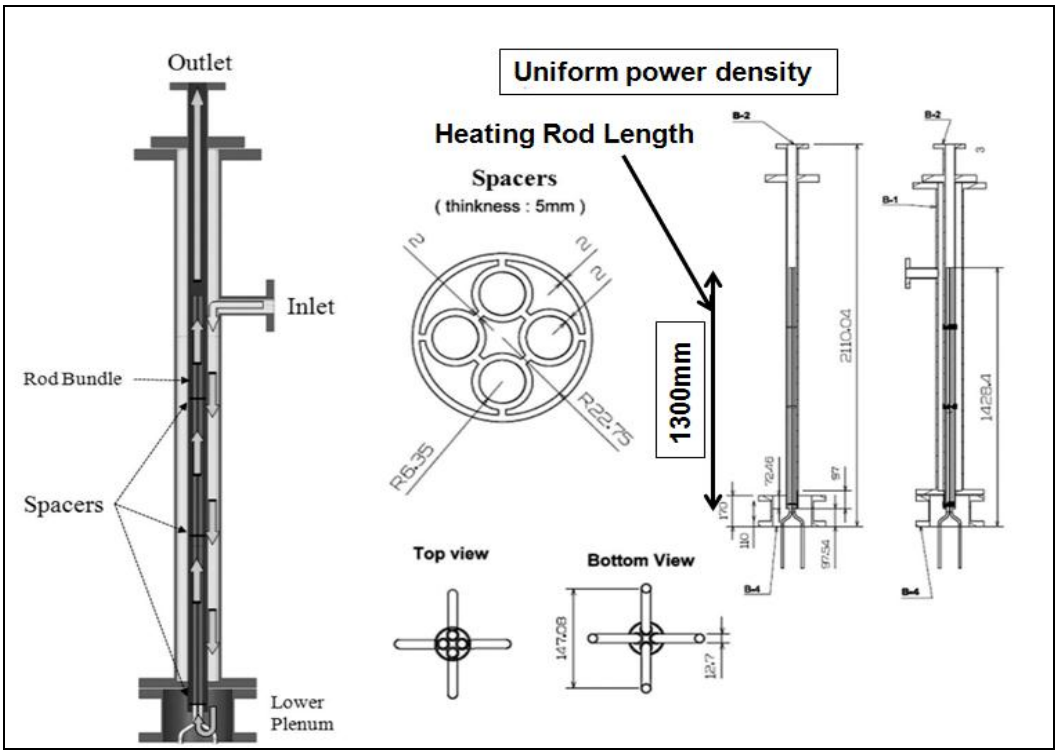

The thermal hydraulic study of natural convection in the core was conducted. Simulations of the flow and heat transfer for different operating conditions to support the benchmark activity, with more details than provided by the experiment, were performed. In the following the results obtained for an 18.3 kW uniform heat flux in the heated rods of the core are given. In this case the measured mass flow rate is 2.54 kg/s. STAR CCM code is used. A mesh of near 3 Million cells is generated. The standard k-ε model is used with all y^+ wall treatments. A first step with an isothermal calculation for a LBE flow rate of2.54 kg/s was considered. Figure 8 shows the pressure distribution along the central line without heating. It also shows the counters of pressure in a plan through the centreline. A pressure drop of 1.76 kPa is computed through the core. A second step, performed with 18.3 kW of heat deposited in the core, has shown as the heat of the core contributes to decreasing the pressure loss in the core. Figure 9 shows pressure distribution along the central line, heated core, 18.3 kW, 2.54 kg/s. In this case the pressure drop in the core is around 1 kPa. The obtained results will be compared with the different code results in another study. In addition, the heat exchanger is currently being simulated. These simulations will support the benchmark study for better assessment where experimental data are not available.

Figure 8: Pressure distribution along the central line without heating, 2.54 kg/s

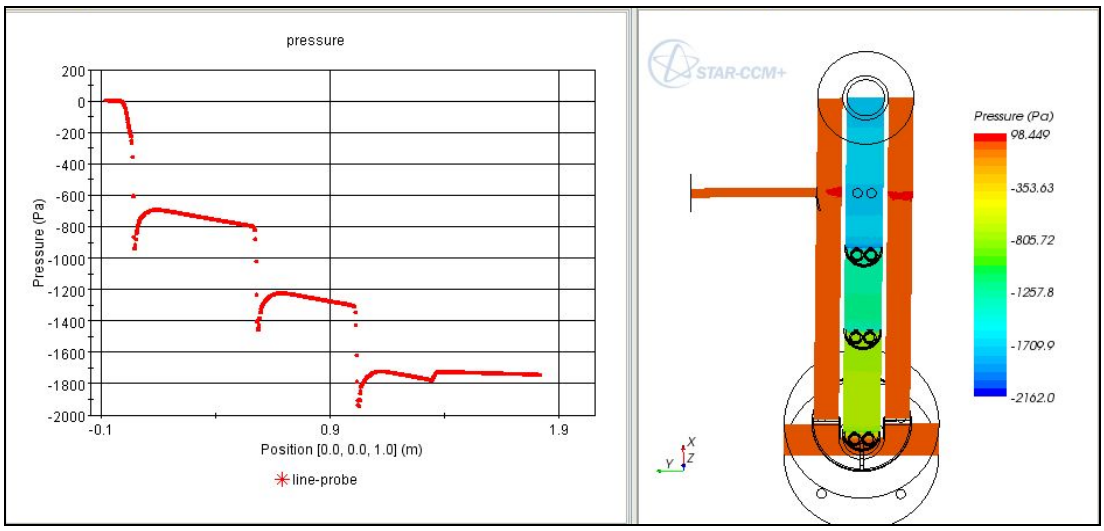

Figure 9: Pressure distribution along the central line, heated core, 18.3 kW, 2.54 kg/s

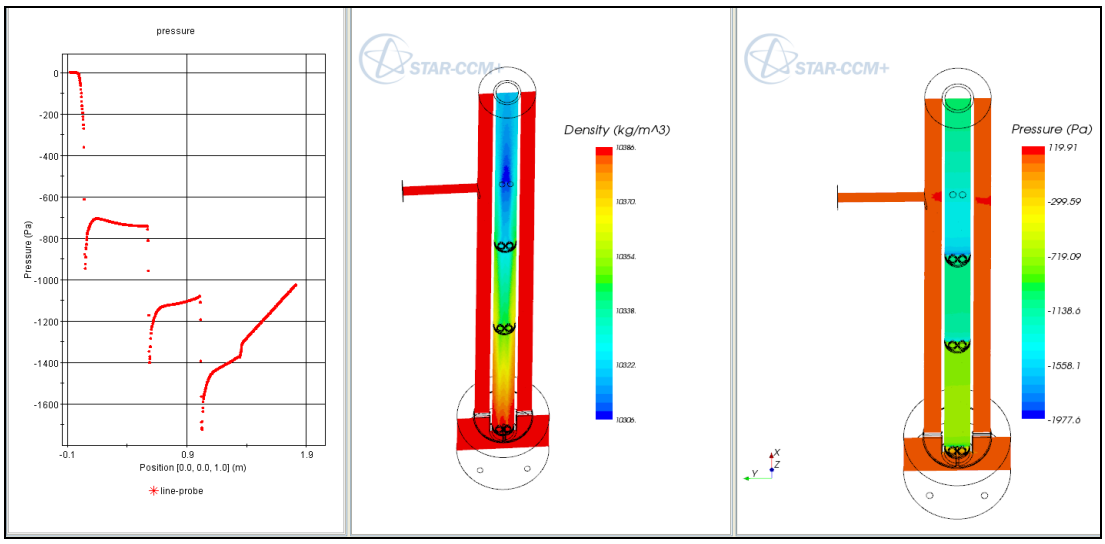

Conclusions

A forced convection test was conducted to confirm the hydraulic resistance of HELIOS. Pressure drops of the orifice region and the core region have good reproducibility. The different used codes in the benchmark predict near similar temperature differences between hot-leg and cold-leg. A further investigation of the reason behind the different absolute temperatures predicted by the different codes is necessary. In the core region the buoyancy compensates for a large part of the pressure losses in the core. This leads to difficulty in measuring losses between inlet and outlet (sensor effectiveness). Accordingly, it is necessary to carry out CFD study for this region. The comparison with isothermal case had shown good accuracy to simulate the core by CFD. The CFD core results are considered for benchmarking.

References

[1] Benchmarking of thermal hydraulic loop models for lead-alloy-cooled advanced nuclear energy systems, Phase I: Isothermal forced convection case, Nuclear Science NEA/NSC/WPFC/DOC(2012)17 June 2012.

[2] Jae Hyun Cho *et al.* (2011), "Benchmarking of thermal hydraulic loop models for Lead-Alloy Cooled Advanced Nuclear Energy System (LACANES), phase-I: Isothermal steady state forced convection", *Journal of Nuclear Materials* 415, 404–414

[3] A. Batta, Jae Hyun Cho, A.G. Class, Il Soon Hwang (2010), "CFD ANALYSIS OF HEAVY LIQUID METAL FLOW IN THE CORE OF THE HELIOS LOOP" *Nucl. Eng. Technol.* 42 (6).