Annex 6

DIRECT DISPOSAL OPTION COST ESTIMATES: GERMANY

1. Introduction

In Germany about 32 per cent of electricity is generated from nuclear power stations comprising 21 reactors with an installed capacity of 23.6 GWe. According to the German Nuclear Energy Act, recycling of uranium and plutonium after reprocessing has first priority for the treatment of spent fuel. The German utilities are interested in having the direct disposal option accepted by the authorities. This Annex concentrates on the direct disposal option; the costs presented have been derived from a German paper entitled *Systemanalyse Mischkonzept (SAM)* which was published in 1989.

2. Outline of the programme

The radioactive waste management system considered is shown schematically in Figure 6.1. Studies carried out in Germany within SAM consider the combined final storage of both radioactive waste from reprocessing and encapsulated spent fuel assemblies.

The total quantity of spent fuel assumed for costing purposes is 35 000 tU (accruing within 50 years) of which about 30 per cent will be in the form of encapsulated spent fuel and the remainder in the form of vitrified high level waste (VHLW) from reprocessing. In practice, it is likely that less than this quantity will need disposal since reductions in fuel quantities will occur with improved fuel utilisation (for example, by fuel burn-up increases).

At present, the German intermediate storage facilities Gorleben and Ahaus, can hold up to 1 500 tonnes of fuel each. The spent fuel will be stored in transport and storage casks of the CASTOR type will be used for the intermediate storage period of about 30 years. Prior to encapsulation, the spent fuel will be unloaded from the CASTOR casks and it will then be encapsulated at the conditioning and encapsulation plant and put into an overpack (for example, POLLUX casks) before being placed in the final repository (Gorleben Salt Dome).

It should be noted that transport and storage casks with higher payloads are still in the development and licensing stages. This development may result in certain technical and economical benefits. The present cost analysis has not taken into account these potential advantages.

The POLLUX cask is cylindrical in shape, about five meters long and one meter in diameter. Depending on the type of POLLUX cask, it can hold up to 24 BWR or 8 PWR fuel assemblies, about 4 tU equivalent. Current development programmes provide for the inclusion of activities with higher payloads. An illustration of a POLLUX cask is shown in Figure 6.2.

Current plans indicate that the repository at Gorleben will operate for approximately 50 years, commencing in 2010, and will receive all the VHLW and spent fuel from the existing German nuclear power

stations. LLW and ILW (which is non-heat generating waste) will be disposed of at the Konrad and Morsleben facilities.

The repository at Gorleben will be situated in a depth of about 900 meters. Two shafts are required for the mining and disposal activities. A schematic layout of the repository is shown in Figure 6.3.

3. Levelised price derivation

The breakdown of the levelised prices to be charged at the time of delivery to the storage or disposal sites is detailed in Table 6.1. The prices are in constant money values. They do not include financing charges, but do include material and labour charges. Although the prices have been levelised using a 4.3 per cent discount rate, this is sufficiently close to the 5 per cent reference discount rate used in this study. There is no significant difference for sensitivity purposes.

Table 6.1. **Back-end prices for the direct disposal option in Germany**

	Prices (DM/kg)		**Prices (ECU/kg)**	
	Discount rate		**Discount rate**	
	0%	**4.3%**	**0%**	**4.3%**
Transport	110	110	60	60
Intermediate storage	390	390	230	230
Total transport/storage	**500**	**500**	**290**	**290**
Encapsulation	600	700	340	400
Final disposal	270	470	160	270
Total encapsulation/disposal	**870**	**1 170**	**500**	**670**

Note: Prices are given in money values of 1991 and have been suitably rounded. The prices quoted were calculated in DM and US$; they were converted to ECU under the study's assumption that $1 = ECU 1.

Reference: Systemanalyse Mischkonzept, PAE, SAM 10/89.

Figure 6.1 **Main system for management of radioactive waste in Germany**

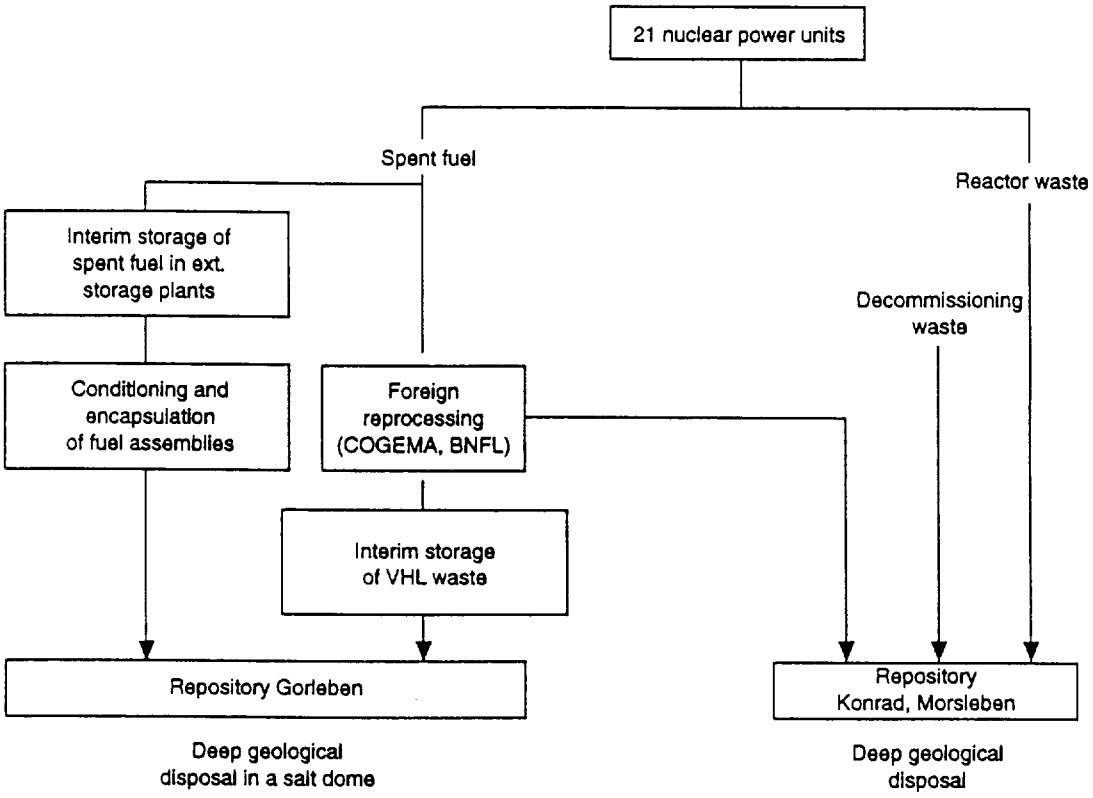

Figure 6.2 **Pollux spent fuel disposal package**

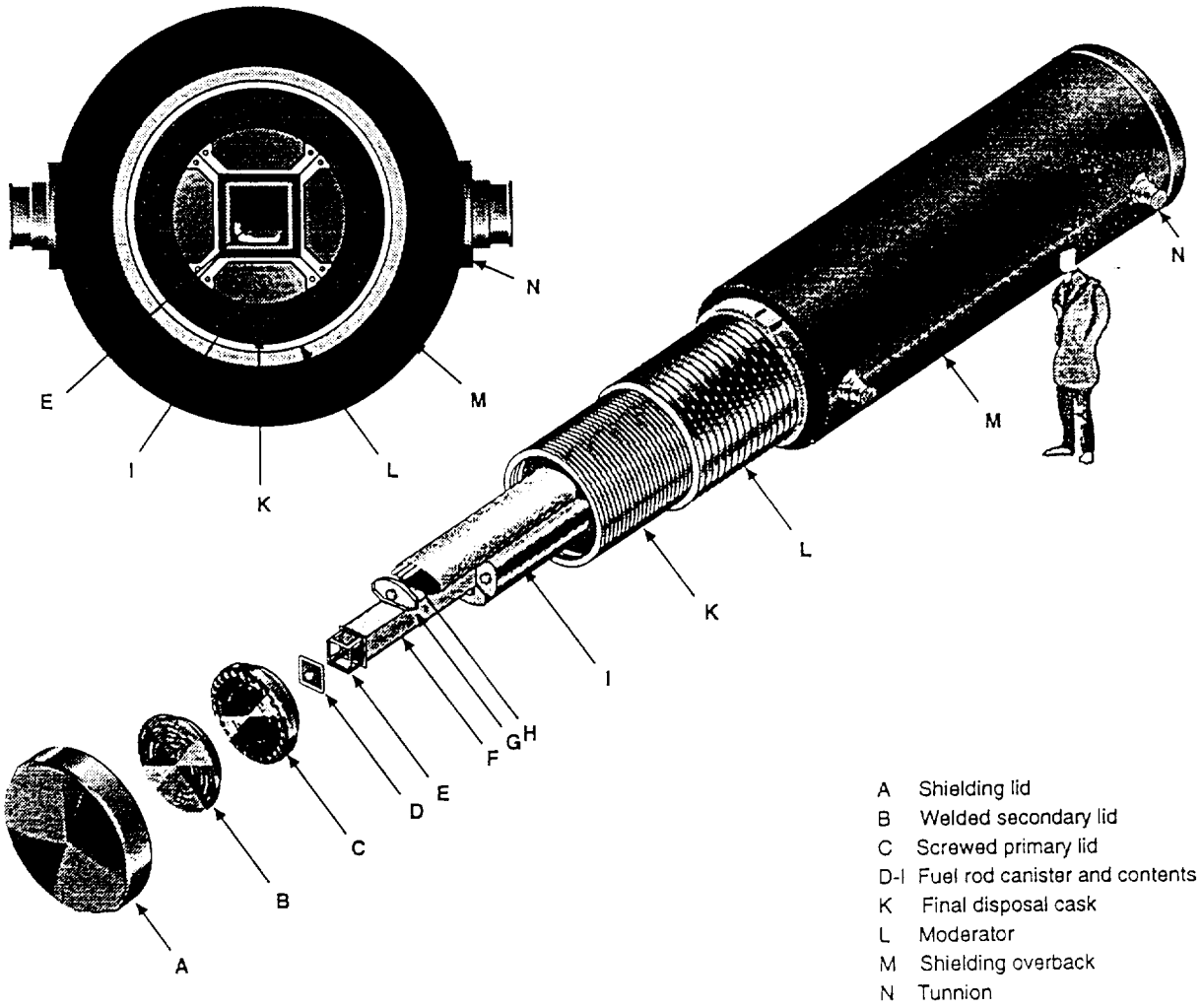

Figure 6.3 **Schematic layout of the repository for borehole and drift emplacement**