SABR fusion-fission hybrid fast burner reactor based on ITER

W.M. Stacey, G.M. Sommer, T.S. Sumner, B. Petrovic, S.M. Ghiaasiaan, G.L. Stewart
Georgia Institute of Technology
Atlanta, GA, United States

Abstract

Fuel cycle and dynamic safety analyses for a subcritical advanced burner reactor (SABR) with a variable strength D-T fusion tokamak neutron source were performed to evaluate the capability of such devices to reduce the requirement for HLWR repositories. Two different fuel cycles were examined, one based on burning all the TRU in spent fuel discharged from LWR, and the other based on setting aside some the plutonium and burning preferentially the minor actinides. The effect of radiation damage limits on fuel cycle performance were examined. Dynamic safety analyses were performed to determine the amount of time available to detect and correct various accident conditions before core damage would occur.

Introduction

Sustainable expansion of nuclear power on the scale required to meet the growing demands for carbon-free electricity, both in the USA and in the world, requires dealing with the problem of the accumulating inventory of spent nuclear fuel discharged from LWR. Partitioning of the long-lived transuranic (TRU) actinides from the (mostly) short-lived fission products, using the former as fuel which is repetitively reprocessed and recycled in fast burner reactors, and sending only the fission products plus trace amounts of the TRU to high-level waste repositories (HLWR) has been suggested as a means to substantially reduce the long-term geological repository capacity that would otherwise be required [1].

The long-term HLWR capacity required would depend on the amount of TRU that went to these repositories along with the fission products, which in turn would depend on the separation efficiency of the spent LWR fuel and of the fast reactor fuel partitioning processes and on the number of such partitioning steps required to fission a given mass of TRU in the fast burner reactors. The number of fast burner reactors (of a given power output) required to fission the TRU in the spent fuel discharged from a given LWR fleet will depend on the fraction of the burner reactor fuel that is TRU. Subcritical operation of the fast burner reactors with a variable-strength neutron source would allow fuel to remain in the burner reactors between reprocessing steps until the radiation damage limit is reached, thus reducing the number of reprocessing steps and the amount of TRU going to the repositories. Subcritical operation also would remove the reactivity margin to prompt critical constraint on critical reactors and allow the burner reactors to be fuelled with 100% TRU fuel, thus reducing the number of burner reactors required. A D-T fusion neutron source based on the tokamak physics and fusion technology that will be demonstrated in ITER [2] is adequate to meet the needs of a subcritical burner reactor [3].

Conceptual design, fuel cycle and safety studies have been performed at Georgia Tech for subcritical burner reactors driven by a fusion neutron source based on ITER physics and technology. Both gas-cooled [4-10] and liquid-metal-cooled reactors [11-14] have been examined. The most highly developed fast reactor type, the sodium-cooled reactor, has been chosen as the reference concept because of the greater experience and more advanced state of development of this concept and the associated facilities. Likewise, the most developed magnetic fusion concept, the tokamak, has been chosen for the neutron source [3,15], and the design has been based on fusion physics and technology that will be demonstrated in ITER. It seems technically feasible to plan deployment of such SABR beginning in 2040.

SABR design

A design concept for a Subcritical Advanced Burner Reactor (SABR) that would be fuelled with 100% TRU fuel to maximise net TRU burn-up and that would operate subcritical with a variable neutron source to achieve deep TRU burn-up at 3 000 MWth has been developed [12]. SABR is a loop-type sodium-cooled fast reactor fuelled with transuranics (TRU) cast into a TRU-Zr metal fuel pin. The annular SABR core is adapted from previous Argonne National Laboratory (ANL) fast reactor designs and consists of 918 hexagonal fuel assemblies arranged in four concentric rings. Each assembly is 15.5 cm across flats and contains 271 wire-wrapped fuel pins of radius 3.63mm [2 mm fuel radius surrounded in turn by a 0.83 mm thick Na-bond, a 0.5mm ODS steel cladding and a 0.3 mm $LiNBO_3$ electrical insulator (to inhibit MHD pressure drop effects)].

The design was based on the "fresh" TRU fuel (40Zr-10Am-10Np-40Pu) being developed at ANL. The initial TRU loading is 30 MT, which achieves $k_{eff} \approx 0.95$ with all fresh TRU fuel. The four-ring annular core, with an inner core radius of 5.0 m, a thickness of 0.62 m and an active fuel height of 2 m (plus a 1 m upper fission gas plenum), encircles the plasma of a tokamak D-T fusion neutron source.

ACTINIDE AND FISSION PRODUCT PARTITIONING AND TRANSMUTATION, ISBN 978-92-64-99174-3, © OECD 2012

Surrounding the fission core and the plasma neutron source is a stainless steel reflector and lithium silicate blanket for tritium breeding; there are also lithium silicate blankets on the top and bottom of the fusion neutron source. Outside of the blankets is a multi-layered shield to protect the superconducting magnets (Figure 1).

Figure 1: Three-dimensional schematic for SABR

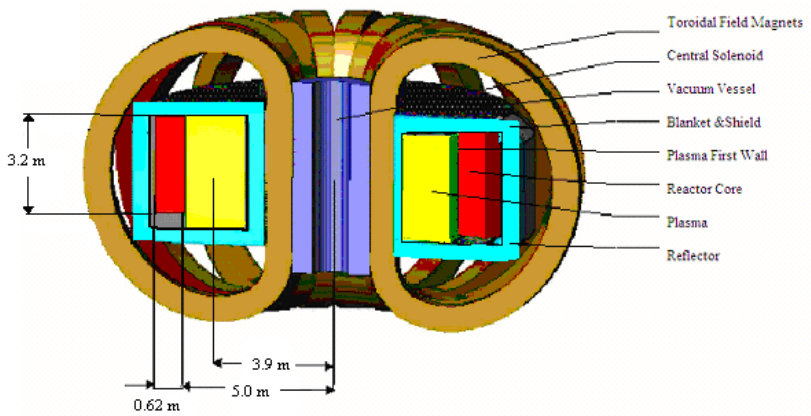

In the four-batch fuel cycle, the fuel is first loaded into the outermost of four fuel rings surrounding the plasma, burned for one burn cycle, then moved inward one ring, etc., until it has been burned for a residence time consisting of four burn cycles, one in each fuel ring. The fuel is then removed from the reactor and reprocessed (using the pyroprocessing method being developed at ANL), combined with fresh TRU, re-fabricated and recycled in SABR again, etc. The four-batch fuel cycle was chosen because batching the fuel results in a higher burn-up. A quarter of the core is removed after each cycle and replaced with fresh fuel. The fresh TRU content of the SABR fuel is shown in Table 1.

Table 1: BOL TRU composition [16]

Isotope	Mass per cent Beginning of life (BOL)
^{237}Np	17.0
^{238}Pu	1.4
^{239}Pu	38.8
^{240}Pu	17.3
^{241}Pu	6.5
^{242}Pu	2.6
^{241}Am	13.6
^{243}Am	2.8

Fusion neutron source

Conservative ITER-like physics was adopted for the design of the SABR tokamak neutron source. Fusion power of P_{fus} = 100-500 MWth is required to support P_{fis} = 3 000 MWth under the range of subcritical operation envisioned. A reference normalised ratio of plasma-to-magnetic pressure β_N = 2.0-2.5% was chosen, although operation at β_N values up to 2.5-3.0% could be justified on the basis of present experience. An energy confinement multiplier H = 1.0-1.1 relative to the presently achieved IPB98(y,2) energy confinement scaling was adopted. The line average electron density was fixed at 75% of the empirical Greenwald density limit to avoid confinement degradation at higher densities. An edge safety factor q_{95} = 3 was specified to avoid MHD kink instabilities. For a R = 3.75 m tokamak a range of operating parameters are possible [15].

The ITER single null diverter (not shown in Figure 1) and first wall were adapted for sodium coolant by scaling down to the SABR dimensions with the same coolant channels. The heat removal capability was confirmed by detailed FLUENT code calculations. The ITER lower hybrid (LH) heating and current drive system was adapted to provide 100 MW of heating and to drive 7.5 MA of plasma current.

The superconducting magnet systems for SABR were directly adapted [8] from the ITER cable-in-conduit Nb_3Sn conductor surrounded by an Incoloy 908 jacket and cooled by a central channel carrying super-cooled helium, with maximum fields of 11.8 and 13.5 T, respectively. The dimensions of the CS coil were constrained by the requirement to provide inductive start-up and to not exceed a maximum stress of 430 MPa set by matching ITER standards and Incoloy properties. The dimensions of the 16TF coils were set by conserving tensile stress calculated as for ITER, taking advantage of an Incoloy 908 jacket for support.

Fuel cycle analysis

Two different types of fuel cycles have been examined. In the *TRU Burner Fuel Cycle*, it is assumed that all the transuranics in the spent nuclear fuel discharged from LWR are reprocessed for use as SABR fuel, and a fuel composition based on the metal fuel being developed at ANL (Table 1 – based on the average composition of all spent nuclear fuel that has been discharged from LWR in the USA) was used as the initial fuel feed. The second *MA Burner Fuel Cycle* analysis emphasised fissioning the minor actinides (MA) in spent fuel while setting aside the plutonium for other uses, as specified in the European studies of reactors to burn minor actinides [17]. The minor actinide cycle was simulated with both oxide and metallic fuels.

The fuel cycle analysis was conducted with the ERANOS 2.0 software package [18], using JEFF-2.0 cross-sections in 33 energy groups from 20 MeV down to 0.1 ev. A lattice cell calculation in P1 transport theory and 1 968 energy groups was performed on the fuel assembly, the energy groups were collapsed to 33 groups and the assembly was then homogenised. The transport simulation in ERANOS was performed with BISTRO, a discrete ordinates transport solver. The flux solution was calculated using a S8 quadrature set in R-Z geometry. Fuel depletion was simulated with the EVOLUTION module. EVOLUTION uses an average flux profile and depletes the fuel based on this profile for a given time period. To achieve an accurate isotopic burn-up the fuel was depleted in 233 day time steps to account for the change in flux profile over time.

The fuel cycle parameters that have been examined are length of the fuel cycle versus accumulated radiation damage in order to determine a baseline fuel cycle and three different fuel types, two metallic fuels and an oxide fuel. The fuel cycles were evaluated on the criteria of overall TRU burn-up, minor actinide transmutation rate, plutonium transmutation rate, power peaking, radiation damage and TRU decay heat produced in the repository. The overall TRU transmutation rate is determined by the power level of SABR and is the sum of the minor actinide transmutation rate and the plutonium transmutation rate. The decay heat production of TRU is the primary factor in the long-term heat load to the repository, hence the amount of spent fuel residue that can be stored in a geological repository.

TRU burner fuel cycle

The first fuel cycle examined was the TRU burner fuel cycle, using the ANL metal fuel with the TRU composition given in Table 1. The TRU burner fuel cycle was first simulated for cycle lengths corresponding to different radiation damage limits of 100, 200 and 300 displacements per atom (dpa). These limits were chosen because currently there is no generally accepted upper limit in place on radiation damage in fast reactors, but fast reactors are predicted to operate in the range of 150 to 200 dpa. The 300 dpa limit was investigated to determine if there is a benefit in conducting research into developing new cladding materials able to withstand a higher radiation damage dose.

Simulations have shown that the relationship between radiation damage and burn-up is linear in the regime from 100 to 300 dpa. This linear relationship results in linear increases in fusion power and TRU burned per residence. The TRU burned per residence is directly related to how much TRU goes ultimately to the geological repository. Assuming 1% reprocessing loss of TRU to the waste stream, the amount of TRU to the repository is 67, 31 and 19 kilograms per year for the 100, 200 and 300 dpa cycles respectively. The light water reactor support ratio, defined as the ratio of TRU destroyed in one SABR to the amount of TRU produced in one 1 000 MWe LWR, increases from 3.2 to 3.5 to 3.6 as the radiation damage limit is extended from 100 to 200 to 300 dpa, because as the fuel cycle length increases the relative availability of SABR increases, due to fewer refuelling outages. The baseline cycle length chosen was the 200 dpa cycle, both because this seems to be a realistic radiation damage limit and because the benefit of a further increase to 300 dpa is marginal (see Table 2).

Table 2: Fuel cycle parameters vs. radiation damage

	100 dpa	200 dpa	300 dpa
Cycle length (EFPD)	350	700	1000
Fuel residence time (yr)	3.83	7.67	10.95
HM out (kg)	6572	6009	5396
FIMA (%)	16.7	23.8	31.6
TRU burned/Yr (kg)	1043	1051	1054
Ratio of decay heat to LWR SNF decay heat at 100 000 years	0.0632	0.0350	0.0244
Kilograms of TRU to the repository per year	67.68	31.39	19.71
Clad damage (dpa)	97	214	294

A further analysis was performed on the 200 dpa fuel cycle to determine the benefit of rotating the assemblies when they are shuffled between rings in order to make the burn-up more uniform and obtain. The fuel assemblies were rotated after each 700 day cycle so that the half of the assembly that is closer to the fusion neutron source changes each burn cycle. This results in a higher and more uniform burn-up and lower power peaking throughout the cycle. The "rotated" 200 dpa fuel cycle has an overall TRU transmutation rate of 1 064 kg of TRU per year with a plutonium transmutation rate of 710 kg per year and a minor actinide transmutation rate of 355 kg per year. The two-to-one ratio of plutonium to minor actinides burned is consistent with the two-to-one ratio of plutonium to minor actinides loaded at BOL. Furthermore the increased burn-up results in less TRU to the repository, with 30.69 kgs/yr of TRU going to the repository, as opposed to 31.46 kgs/yr in the unrotated case.

Minor actinide burner fuel cycle

The second MA burner fuel cycle analysis emphasised fissioning the minor actinides (MA) in spent fuel while setting aside the plutonium for other uses, as specified in the European studies of reactors to burn minor actinides. This analysis used the same oxide fuel used for the EFIT transmutation system [17], as well as a metal fuel with the same TRU composition shown in Table 3. EFIT is an accelerator-driven subcritical transmutation system with a fixed neutron source strength and fuel designed to have very small changes in reactivity as a function of time.

The TRU is the same composition for both the oxide and metal fuel and is 45.7% Pu and 54.3% minor actinides, with 50.3% of the Pu being fissile Pu. The difference between the oxide and metal fuel is the oxide is embedded in a 45% MgO matrix, whereas the metal fuel is in a 60% MgO matrix. The EFIT metal fuel is used in the same fuel pins and assemblies as the ANL metal fuel. However, a slight redesign with larger fuel pins, fewer pins per assembly and additional sodium coolant was necessary for the EFIT oxide fuel. The oxide fuel pins have 51% more coolant per pin than the metallic pins.

Table 3: Plutonium and minor actinide vector in EFIT fuel [17]

Plutonium vector		Minor actinide vector	
Isotope	**Mass %**	**Isotope**	**Mass %**
Pu^{238}	3.737	Np^{237}	3.884
Pu^{239}	46.446	Np^{239}	0.0
Pu^{240}	34.121	Am^{241}	75.51
Pu^{241}	3.845	Am^{242m}	0.254
Pu^{242}	11.85	Am^{242f}	0.000003
Pu^{243}	0.0	Am^{243}	16.054
Pu^{244}	0.001	Cm^{242}	0.0
		Cm^{243}	0.066
		Cm^{244}	3.001
		Cm^{245}	1.139
		Cm^{246}	0.089
		Cm^{247}	0.002
		Cm^{248}	0.0001

The same 200 dpa, four-batch with rotated assembly fuel cycle described above was analysed for both the EFIT oxide and metallic fuel MA burner fuel cycles. The results are shown in Table 4, and comparable results from the TRU burner fuel cycle are also included.

Table 4: Fuel cycle comparisons

	TRU burner ANL metal fuel	MA burner EFIT metal fuel	MA burner EFIT oxide fuel
Fission power (MWth)	3 000	3 000	3 000
Coolant	Na	Na	Na
BOL mass HM (kg)	30 254	49 985	47 359
BOC mass HM (kg)	28 846	48 468	45 658
EOC mass HM (kg)	26 803	46 441	43 542
Delta mass (kg)	2 042	2 027	2 110
Loading outer (kg)	7 887	13 040	12 345
HM out (kg)	5 862	11 013	10 234
FIMA (%)	25.6	15.5	17.1
Power peaking BOC/EOC	1.69/1.89	1.46/1.62	1.34/1.51
BOL p_{fus} (MW)	172	489	515
BOC p_{fus} (MW)	302	190	195
EOC p_{fus} (MW)	401	246	325
BOL k_{eff}	0.945	0.889	0.909
BOC k_{eff}	0.878	0.949	0.959
EOC k_{eff}	0.831	0.932	0.936
Cycle reactivity change	-6 441 pcm	-1 922 pcm	-2 552 pcm
TRU burned/yr (kg)	1 064	1 089	1 122
MA burned/yr (kg)	355	853	674
Pu burned/yr (kg)	710	236	469
U generated/yr (kg)	0.5	31	21
Ratio of decay heat to LWR SNF decay heat at 100 000 years	0.046	0.0999	0.0998
Support ratio (100%)	4.2	34.1	27.0
Support ratio (75%)	3.2	25.6	20.2
Clad damage (dpa)	214	203	201

The TRU transmutation rate for the EFIT fuel is 1 089 kgs per year for the metal and 1 122 kgs per year for the oxide fuel. The metal fuel burns more minor actinides than the oxide fuel; 78.3% of the TRU burned in the metal fuel is minor actinides compared to 58.9% of the TRU burned in

ACTINIDE AND FISSION PRODUCT PARTITIONING AND TRANSMUTATION, ISBN 978-92-64-99174-3, © OECD 2012

the oxide fuel. This is because the metal fuel is in a harder spectrum, making the fission cross-section of the minor actinides more competitive with the fission cross-section of the plutonium in the system. The harder spectrum is a result of the metallic fuel having a somewhat different fuel assembly design with less coolant per assembly.

The light water reactor support ratio for the MA burner fuel cycle is defined as the ratio of minor actinides burned in SABR to the amount of minor actinides produced in a 1 000 MW_e LWR, typically about 25 kgs of minor actinides per year. The LWR support ratios for the SABR metallic and oxide Europeans fuels, assuming 75% availability, are 25.6 and 20.2 respectively.

The change in reactivity throughout the fuel cycle is greater in the oxide fuel because more plutonium is burned. This results in a greater change in fusion power from beginning of cycle to end of cycle. The fusion power required to maintain 3 000 MWth fission power varied from P_{fus} = 200-500 MW in this fuel cycle, and the rate of MA fission (destruction) was 850 and 675 kg/EFPY, for metal and oxide forms of the fast reactor fuel, respectively.

The EFIT fuel is designed with the transmutation strategy of "42-0", referring to the ratio of minor actinides burned to net plutonium burned – 42 kg per terawatt hour for the minor actinides and 0 kg of plutonium. In SABR the EFIT fuel does not maintain the burning strategy of "42-0". It burns more plutonium than in the EFIT system. This is caused by the longer fuel irradiation times in SABR, 2 800 days compared to 1 095 for EFIT, and thus at the end of cycle the fuel that is being burned is no longer minor actinides but plutonium.

The rest of the evaluation criteria: power peaking, radiation damage, overall TRU destruction rate, and TRU decay heat produced for the metallic and oxide fuels in the minor actinide burning cycle were all very similar throughout the fuel cycle. This is a result of the fuels having similar BOL, BOC, and EOC reactivities and fusion powers. The oxide fuel performs better in terms of power peaking and overall burn-up 17.1% to 15.5% for the oxide and metallic fuel respectively.

Dynamic safety analysis of SABR

Dynamics calculations for SABR during various transient conditions were performed using the thermal-hydraulics code RELAP5-3D [20], which is able to couple the power generation of the fission core with the thermal-hydraulics of the heat removal system. The ATHENA version of RELAP5-3D allows for the simulation of liquid metal coolants such as sodium. The feedbacks taken into account in the simulation are the positive sodium void coefficient and the small negative fuel Doppler coefficient. However, the anticipated negative fuel bowing and expansion coefficients were not included, so the calculated power excursions are more severe than they would be if this negative feedback were taken into account. Two types of accidents are simulated to determine the dynamic safety characteristics of SABR. Accidents affecting SABR's heat removal capability in the fission core are loss of coolant mass flow (LOFA), loss of heat sink (LOSHA), and loss of power (LOPA). Accidents affecting the neutron population in the core are accidental reactivity insertion and accidental increase in source neutrons. These accidents were evaluated with the main criterion of whether the fuel has exceeded its melting temperature of 1 473 K and a secondary criterion of coolant boiling.

Heat removal accidents

The first accident investigated was the LOFA. Loss of mass flow was represented as the complete failure of one or more of the primary loop pumps while the neutron source remains active. These transients were simulated in order to determine the amount of time that would be available to detect the accident and shut down the neutron source before core damage occurs. SABR can sustain an accident of a single pump failure without corrective actions at all points in the fuel cycle (BOL, BOC and EOC) without coolant boiling or fuel melting. Coolant boiling will occur if two pumps fail resulting in a 50% loss in coolant mass flow, but fuel melting does not occur until there is a 75% reduction in mass flow.

The LOHSA was analysed as a loss of flow in the secondary system. During all three reference points in the fuel cycle (BOL, BOC and EOC) SABR can withstand without coolant boiling or fuel melting up to a 50% LOHSA, which corresponds to half of the intermediate loop coolant pumps failing. At EOC, the maximum coolant temperature reaches 1 132 K, which is close to the sodium boiling temperature of 1 156 K. Coolant boiling and fuel melting will ultimately occur at a LOHSA greater than 50%. For a 75% LOHSA the minimum times to coolant boiling and fuel melting occur at EOC in 45 and 146 seconds, respectively. With complete and instantaneous loss of heat sink, the coolant would boil in 24 seconds and the fuel would melt in 56 seconds.

The final heat removal accident is the LOPA. A LOPA corresponds to all coolant pumps being turned off as well as the fusion neutron source being shut down, resulting in the reactor shutting down to the decay heat level in a few seconds. Natural circulation is then sufficient to cool the reactor. The maximum coolant temperatures reached at BOL, BOC and EOC are 947 K, 1 103 K and 1 068 K, all well below the sodium boiling temperature of 1 156 K. The maximum fuel temperatures reached at these points in the cycle were: 1 008 K, 1 109 K and 1 070 K, all significantly below the fuel melting temperature of 1 473 K.

Neutron population accidents

The first type of neutron population accident considered was an accidental reactivity insertion. Two different control rod accidents were simulated; both accidents consider operating SABR at full power with all rods in. The first accident is the ejection of one of the control rods corresponding to a reactivity insertion of $0.56. In this accident the power is increased by 190 MW but neither the coolant boils nor the fuel melts. The second accident is the ejection of all rods at full power. This results in a fission power increase to 5 884 MW_{th}. In this instance the fuel temperature increases to 1 354 K, below the melting temperature of 1 473 K, but the coolant does exceed the boiling point of 1 156 K.

The second “neutron population” accident is an accidental increase in the fusion power. This in principle could be caused by either an increase in the external plasma heating or an increase in the plasma fuelling rate. The plasma heating power is provided by 20 MW RF launcher modules. An increase in plasma heating was investigated by turning on an additional 20 MW lower hybrid launcher. For the increase of a single 20 MW launcher the maximum coolant and fuel temperatures reached were 1 079 and 1 142 K, respectively, below the respective melting and boiling temperatures of 1 156 and 1 473 K. Turning on a second 20 MW launcher would cause the plasma to exceed the Troyon Beta Limit indicating that the plasma energy confinement and stability would be degraded and shut down the neutron source.

The other accident considered was an increase in the ion fuelling rate. Simulations representing inadvertent increases in plasma fuel injection indicated that at BOL, BOC and EOC coolant boiling occurs at an increased fuelling rate of 12%, 17% and 19% respectively. However, at 11%, 1% and 2% increase in the fuelling rate respectively, the Troyon Beta Limit would be exceeded, causing the neutron source to shut down before coolant boiling occurs.

Conclusions

A 3 000 MWth SABR operating on a TRU burner cycle with a clad radiation damage limit of 200 dpa and an availability of 75% can fission the TRU in the spent fuel discharged annually by 3.5 LWR (1 GWe). The same SABR operating on a MA burner fuel cycle can fission the minor actinides in the spent fuel discharged annually from 20 (oxide) to 25 (metal) LWR (1 GWe). The TRU burner fuel cycle reduces the long-term decay heat to the HLWR repository to < 5% of the decay heat that would be present if the spent fuel from LWR was placed in the repository. The dynamic analysis of several accidents indicates that SABR has favourable safety characteristics which will become more apparent when the negative fuel motion reactivity coefficients are included in the analysis.

References

[1] Nuclear Energy Agency (NEA), *Actinide and Fission Product Partitioning and Transmutation, Information Exchange Meetings*, Meetings 1-10, OECD/NEA, Paris (1990-2007).

[2] *www.ITER.org*.

[3] Stacey, W.M., "Tokamak D-T Fusion Neutron Source Requirements for Closing the Nuclear Fuel Cycle", *Nucl. Fusion*, 47, 217 (2007).

[4] Stacey, W.M., *et al.*, "A Sub-critical Gas-cooled Fast Transmutation Reactor (GCFTR) with a Fusion Neutron Source", *Nucl. Technol.*, 150, 162 (2005).

[5] Stacey, W.M., J. Mandrekas, E.A. Hoffman, "Sub-critical Transmutation Sources with Tokamak Fusion Neutron Sources", *Fusion Sci. Technol.*, 47, 1210 (2005).

[6] Stacey, W.M., *et al.*, "A Sub-critical, He-cooled Fast Reactor for the Transmutation of Spent Nuclear Fuel", *Nucl. Technol.* 156, 9 (2006).

[7] Stacey, W.M., "Sub-critical Transmutation Reactors with Tokamak Neutron Sources Based on ITER Physics and Technology", *Fusion Sci. Technol.*, 52, 719 (2007).

[8] Stacey, W.M., *et al.*, "Advances in the Sub-critical, Gas-cooled, Fast Transmutation Reactor Concept", *Nucl. Technol.*, 159, 72 (2007).

[9] Hoffman, E.A., W.M. Stacey, "Comparative Fuel Cycle Analysis of Critical and Subcritical Fast Reactor Transmutation Systems", *Nuclear Technol.*, 144, 83 (2003).

[10] Maddox, J.W., W.M. Stacey, "Fuel Cycle Analysis of a Sub-critical Fast, He-cooled Transmutation Reactor with a Fusion Neutron Source", *Nuclear Technol.*, 158, 94 (2007).

[11] Stacey, W.M., *et al.*, "A Fusion Transmutation of Waste Reactor", *Fusion Sci. Technol.*, 41, 116 (2001).

[12] Stacey, W.M., *et al.*, "A TRU-Zr Metal Fuel, Sodium Cooled, Fast Subcritical Advanced Burner Reactor", *Nucl. Technol.*, 162, 53 (2008).

[13] Sommer, C.M., W.M. Stacey, B. Petrovic, "Fuel Cycle Analysis of the SABR Subcritical Transmutation Reactor Concept", *Nuclear Technology*, 172, 48 (2010).

[14] Sumner, T.S., W.M. Stacey, S.M. Ghiaasiaan, "Dynamic Safety Analysis of the SABR Subcritical Transmutation Reactor Concept", *Nuclear Technology*, 171, 123 (2010).

[15] Floyd, J.P., *et al.*, "Tokamak Neutron Source for a Fast Transmutation Reactor", *Fus. Sci. Technol.*, 52, 727 (2007).

[16] Hayes, Stephen, Mitchell Meyer, Personal Communication, Argonne National Laboratory (2007).

[17] Artioli, C., *et al.*, "Minor Actinide Transmutation in ADS: The EFIT Core Design", *International Conference on the Physics of Reactors*, Interlaken, Switzerland, September (2008).

[18] Rimpault, G., *et al.*, *Proc. Int. Conf. New Frontier of Nuclear Technol.: Reactor Physics, Safety and High-Performance Computing (PHYSOR)*, Seoul, South Korea, 7-10 October (2002).

[19] Romanello, V., *et al.*, "Advanced Fuel Cycle Scenario Study in the European Context by Using the SABR Hybrid Fusion-fission System", these proceedings.

[20] Idaho National Laboratory (INL), "RELAP5-3D Home Page", *www.inl.gov/relap5*, August (2009).