Workshop on Fuel Cycle Safety – Past, Present and Future, Wilmington, 2007

Legacy Facilities at Dounreay - Managing Through Life Safety

Tony Wratten

Assurance Unit Manager

Colin McColm

ILW Projects Manager

amec CH2MHILL UKAEA

UKAEA Dounreay - A Unique Challenge

- Dounreay was established in 1955 by the UKAEA to pursue fast reactor technology and its fuel cycle for the civil nuclear power programme.

- 3 reactors were built with a number of associated, laboratory, fuel cycle, administration, waste processing and experimental buildings.

- Due to the experimental nature of the site, there are a number of processes, wastes and liability legacies which are unique to the site.

amec CH2MHILL UKAEA

Fuel Cycle Area Plants

- Constructed in 1950's
- 2 Reprocessing plants
- PIE Facilities
- Fuel Fabrication Plant
- Uranium Recovery Plant
- Chemical Laboratories
- Raffinate Storage Plant
- Cementation Plant
- Waste Treatment and Storage
- Fuels/Fissile Stores

Design/Safety Case Timeline

1950's

- Used design codes from that era;
- Radiological protection & criticality effects assessed;
- Material choice, temp, pressure etc considered;
- Large design margins against uncertainty;
- Individual plant modifications assessed;
- Maintenance of as-built drawings patchy;
- Records of incidents/spillages not consistently maintained

Development of Safety Cases at Dounreay

- Late 1980's, Government decision that from 1990, UKAEA sites would be subject to NII Licensing;
- License requires documented safety cases to be produced, maintained and periodically reviewed;
- 1st generation of safety cases introduced for FCA plants in late 1980's prior to NII Licensing;
- Produced against tight deadline, quality variable;
- Used probabilistic approach to demonstrate risks were tolerable;
- No engineering substantiation, emphasis was on safety argument rather engineered controls

amec CH2MHILL UKAEA

Introduction of “Modern Standards” Safety Cases

- 1990’s – Increasing NII concerns over material condition of site and level of in-house engineering competence;
- 1998 – NII Direction halted FCA operations;
- New safety cases produced for each FCA plant prior to restart;
- Included retrospective substantiation of design against “modern standards”;
- Reasonably practical improvements identified/implemented to bridge the gap;
- In some cases decision made to close the plant rather than implement improvements (e.g. wet silo, LLW incinerator).

Applying Substantiation to Existing Plant

- Retrospective substantiation is never as effective as design substantiation;
- Deciding what is a “reasonably practicable” improvement is to some extent subjective;
- Makes life difficult for both operators and regulators;
- Need a good screening process to avoid going too far;
- Need to take account of remaining operational lifetime;
- If site funding is fixed, money spent on upgrades will delay decommissioning;
- Post 1998 – hindsight shows that too many systems were upgraded shortly before closure/decommissioning, e.g. replacement wiring, ventilation upgrades made for operational reasons without proper consideration for decommissioning

Upgrade or Decommission?

amec CH2MHILL UKAEA

Practical Experience

- Building structures – difficult to backfit seismic requirements;
- Cells/caves generally in good condition (but not windows);
- Liquor storage tanks difficult to substantiate, several examples of leakage through gaskets, seals, valves;
- Electrical: HV distribution system increasing problems,
- In-building systems upgraded if long remaining lifetime, new wiring for decommissioning on safety grounds
- Instrumentation – generally upgraded through lifetime as system becomes obselete;
- Human factors – cumulative effect of extensions made control room panels difficult to understand/operate, new central control room installed;
- Legacy issues – not always predicted by safety case process, make decommissioning difficult (but interesting) – precautionary approach

Zinc Bromide Window – Cracked alpha glass

Zinc Bromide Window – Seepage From Joints

Replacement Leaded Glass Window

Leakage from Flange on UO3 Storage Tank

Corroded Equipment Inside UO3 Glovebox

Typical Early Glovebox Design

Weaknesses Around Gaskets and Joints

Historic Contamination Inside Window

Cable joint failure

Joint failure analysis – ERA Technology

- Failure occurred at crutch area of PILC cable (point of highest electrical stress)
- Failure due to general degradation of PILC cable, accelerated by disturbance during jointing
- General condition of PILC cable poor but similar to other 25 year old cables examined by ERA
- No evidence of any joint construction anomalies contributing to failure mechanism

1 MVA Oil Filled 11 kV – 415V Transformer

2007

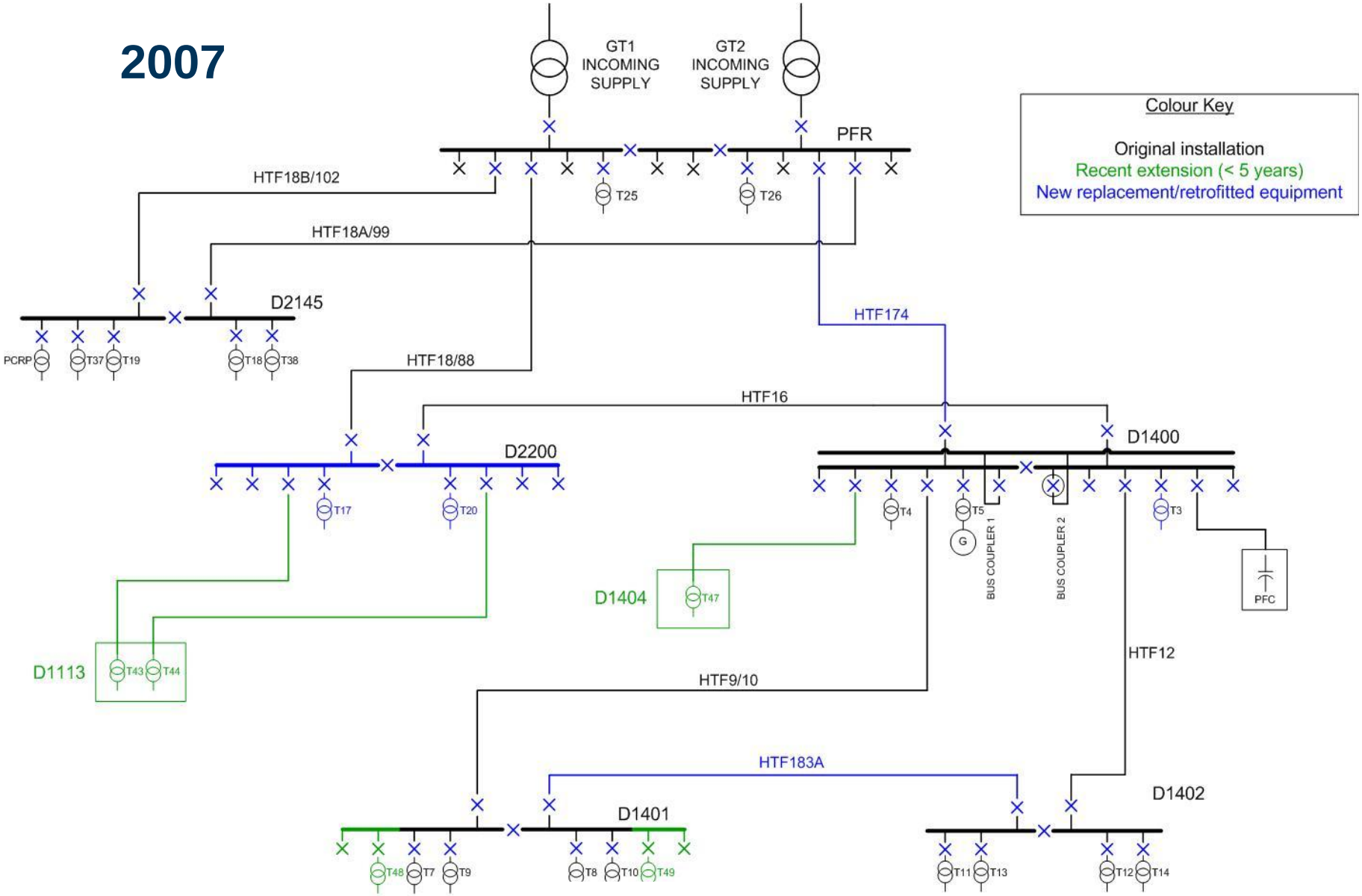

amec CH2MHILL UKAEA

2025

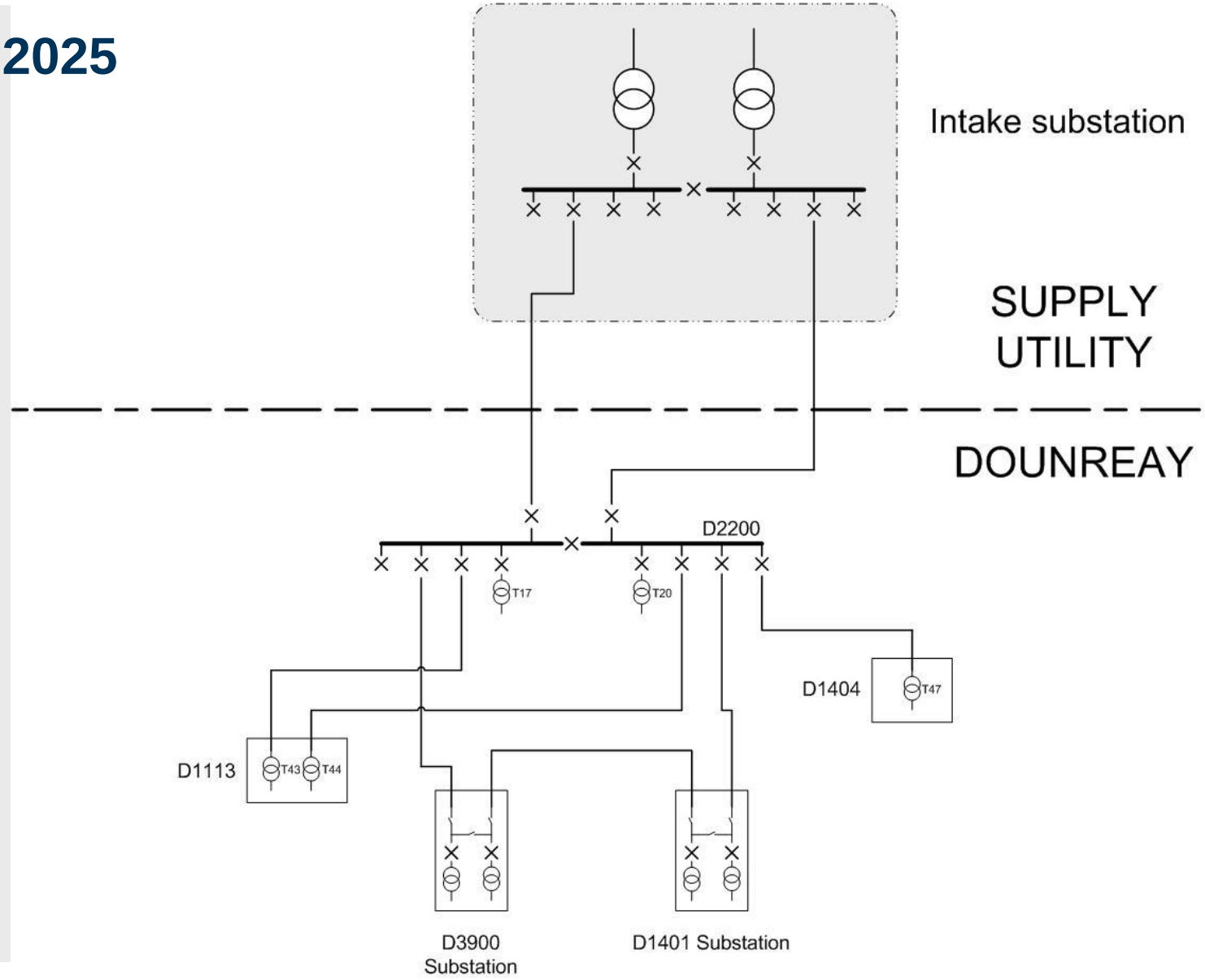
Intake substation
SUPPLY UTILITY
DOUNREAY
D2200
T17
T20
D1404
T47
D1113
T43
T44
D3900 Substation
D1401 Substation

Severe Corrosion at Base of Structural Column

Conclusion

- Primary systems have generally stood the test of time well, which is a tribute to the original design engineers;
- Associated infrastructure and systems have suffered more from the effects of ageing;
- “Modern standards” safety cases have provided a systematic methodology for determining need for upgrades;
- Liquors in long-term storage will inevitably come back to “bight you”;

and finally:

- Don’t let the effects of ageing depress you, it does have its’ good points, I won my first golf club monthly medal competition aged 50 so there is hope for us all!!