ЦКТИ–ВИБРОСЕЙСМ

ИНЖИНИРИНГ ПРОЧНОСТЬ ВИБРОЗАЩИТА И СЕЙСМОСТОЙКОСТЬ

CKTI–VIBROSEISM

A STRUCTURAL–MECHANICAL CONSULTING ENGINEERING FIRM

Seismic Engineering Knowledge Transfer Seminar

Seismic Design and Response of NPP Piping

Alexey Berkovsky (bam@cvs.spb.su)
CKTI-Vibroseism, St. Petersburg, Russia

www.cvs.spb.su

21-25 November 2011
Nuclear Research Institute Rez, Czech Republic

Overview

- Terms and Definitions;
- Piping Flexibility and Stress Analysis;
- Seismic Design and Qualification;
- ASME BPVC
- Seismic Restraints
- Sample of seismic analysis of NPP piping with use of different types of seismic restraining

Terms and Definitions

(ASME B31E "Standard for the Seismic Design and Retrofit of Above-Ground Piping Systems")

active components: components that must perform an active function, involving moving parts or controls during or following the earthquake (e.g., valves, valve actuators, pumps, compressors, and fans that must operate during or following the design earthquake);

axial seismic restraint: seismic restraint that acts along the pipe axis;

critical piping: piping system that must remain leak tight or operable (see definitions) during or following the earthquake;

design earthquake: the level of earthquake for which the piping system is to be designed for to perform a seismic function (position retention, leak tightness, or operability);

ductile piping system: in the context of this Standard for seismic qualification, ductile piping system refers to a piping system where the piping, fitting, and components are made of material with a minimum elongation at rupture of 15% at the temperature concurrent with the seismic load;

Terms and Definitions

free-field seismic input: the ground seismic input at the facility location;

in-structure seismic input: the seismic excitation within a building or structure, at the elevation of the piping system attachments to the building or structure;

lateral seismic restraints: seismic restraints that act in a direction perpendicular to the pipe axis;

leak tightness: the ability of a piping system to prevent leakage to the environment during or following the earthquake;

noncritical piping: piping system other than critical piping that nevertheless must meet the requirements for position retention;

position retention: the ability of a piping system not to fall or collapse in case of design earthquake;

Terms and Definitions

seismic design: the activities necessary to demonstrate that a piping system can perform its intended function (position retention, leak tightness, operability, or a combination) in case of design earthquake;

seismic function: a function to be specified by the engineering design either as position retention, leak tightness, or operability;

seismic interactions: spatial or system interactions with other structures, systems, or components that may affect the function of the piping system;

seismic response spectra: a plot or table of accelerations, velocities, or displacements versus frequencies or periods;

seismic restraint: a device intended to limit seismic movement of the piping system;

seismic retrofit: the activities involved in evaluating the seismic adequacy of an existing piping system and identifying the changes or upgrades required for the piping system to perform its seismic function

Terms and Definitions

seismic static coefficient: acceleration or force statically applied to the piping system to simulate the effect of the earthquake;

Piping Flexibility and Stress Analysis

STRESS ANALYSIS: WHAT DOES IT MEAN?

Piping Stress Analysis is a term applied to calculations, which address the static and dynamic loading resulting from the effects of gravity, temperature changes, internal and external pressures, changes in fluid flow rate and seismic activity. Codes and standards establish the minimum requirements of stress analysis.

Piping Flexibility and Stress Analysis

Purpose of piping stress analysis is to ensure:

- Safety of piping and piping components;
- Safety of connected equipment and supporting structure;
- Piping deflections are within the limits;

Deflection limits are not Code requirements, but are generally accepted practices; a 13-mm (1/2-in.) deflection is a generally accepted guideline for general process plant piping. More stringent limits may be required for lines that must avoid pockets caused by sagging of the line; greater deflection is generally acceptable from a mechanical integrity standpoint, if not an operator confidence standpoint.

Piping Flexibility and Stress Analysis

HOW PIPING AND COMPONENTS FAIL (MODES OF FAILURES)

- **FAILURE BY GENERAL YIELDING:** Failure is due to excessive plastic deformation:
  - **Yielding at Sub Elevated temperature**: Body undergoes plastic deformation under slip action of grains;
  - **Yielding at Elevated temperature:** After slippage, material re-crystallizes and hence yielding continues without increasing load. This phenomenon is known as ***creep***
- **FAILURE BY FRACTURE:** Body fails without undergoing yielding
  - **Brittle fracture:** Occurs in brittle materials.
  - **Fatigue:** Due to cyclic loading initially a small crack is developed which grows after each cycle and results in sudden failure.

Piping Flexibility and Stress Analysis

WHEN PIPING AND COMPONENTS FAIL (THEORIES OF FAILURE):

Maximum principal stress theory

This theory states that yielding in a piping component occurs when the magnitude of any of the three mutually perpendicular principle stresses exceeds the yield point strength of the material

Maximum shear stress theory

This theory states that failure of a piping component occurs when the maximum shear stress exceeds the shear stress at the yield point in a tensile test. In the tensile test, at yield, S1=Sy (yield stress), S2=S3=0.So yielding in the components occurs when:

Maximum Shear stress = τ_{max} = S1 - S2 / 2 = Sy / 2

Different Codes – different theories of failure!

Piping Flexibility and Stress Analysis

CLASSCIFICATION OF LOADS

- **PRIMARY LOADS: These loads are typical loads such as internal pressure, external pressure, gravitational forces like the weight of pipe and fluid. These loads are generally called as sustained loads. Failure of the pipe due to any of the mentioned loads are called as catastrophic failures**

These can be divided into two categories based on the duration of loading.

- **Sustained loads**

  These loads are expected to be present through out the plant operation. e,g. pressure and weight.

- **Occasional loads.**

  These loads are present at infrequent intervals during plant operation. e,g. earthquake, wind, etc.

Piping Flexibility and Stress Analysis

CLASSCIFICATION OF LOADS

- **SECONDARY LOADS: Just as primary loads have origin in some force, secondary loads are caused by displacement of some kind. e.g. the pipe may be under load if the tank nozzle moves up or down. A pipe subjected to a cycle of hot and cold fluid similarly undergoes cyclic loads and deformation.**
  - **Expansion loads:** *These are loads due to displacements of piping. e,g. thermal expansion, seismic anchor movements, and building settlement.*

Piping Flexibility and Stress Analysis

STRESS CATEGORIES

- **PRIMARY STRESSES:**

These are developed by the imposed loading and are necessary to satisfy the equilibrium between external and internal forces and moments of the piping system. Primary stresses are not self-limiting.

- **SECONDARY STRESSES:**

These are developed by the constraint of displacements of a structure. These displacements can be caused either by thermal expansion or by outwardly imposed restraint and anchor point movements. Secondary stresses are self-limiting.

- **PEAK STRESSES:**

Unlike loading condition of secondary stress which cause distortion, peak stresses cause no significant distortion. Peak stresses are the highest stresses in the region under consideration and are responsible for causing fatigue failure.

Piping Flexibility and Stress Analysis

LOAD-CONTROLLED VERSUS DEFORMATION-CONTROLLED BEHAVIOR

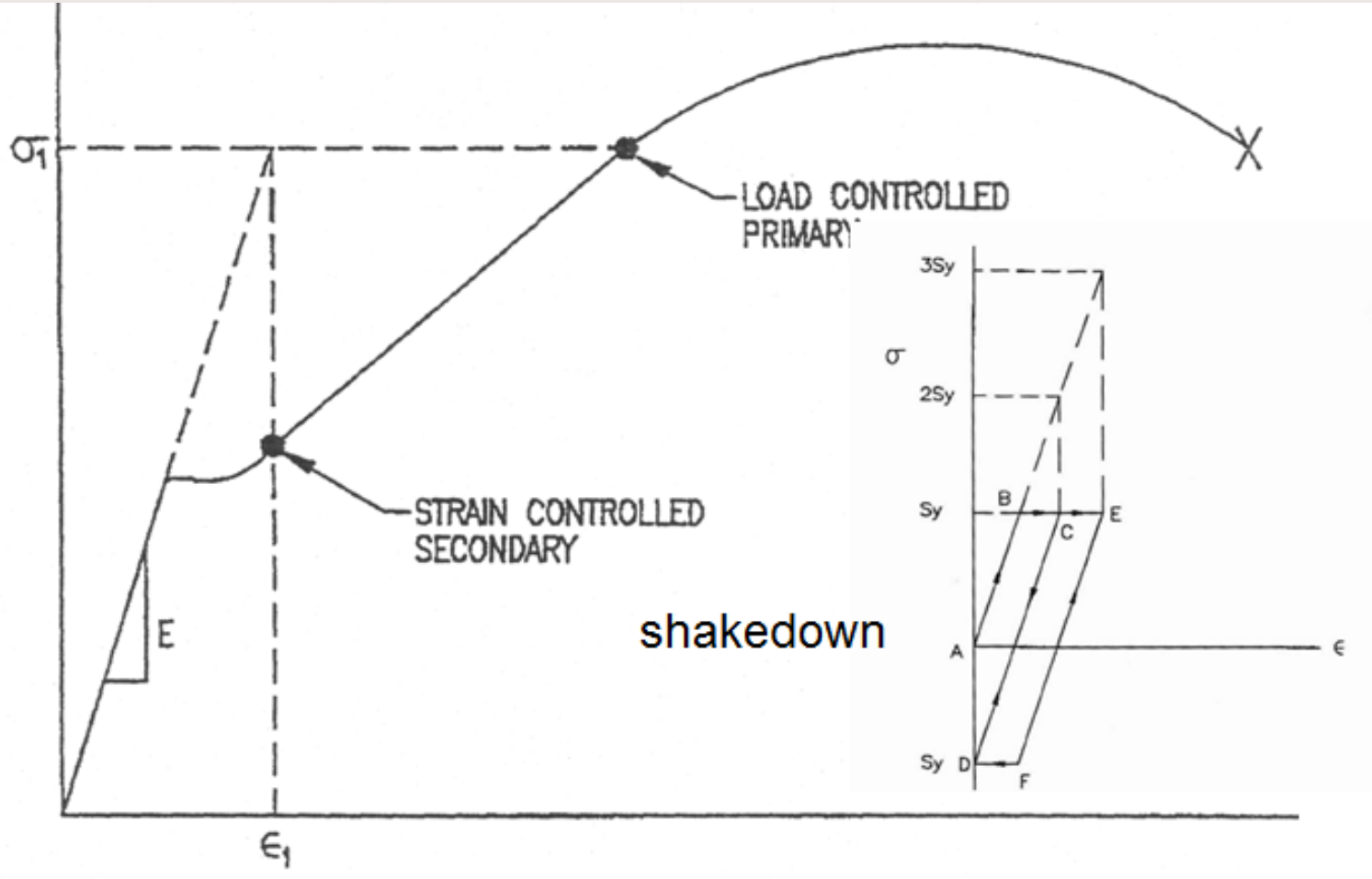

Piping Flexibility and Stress Analysis

PIPING CODES & STANDARDS

INDUSTRIAL PIPING:

- **ASME CODES (B31.X):**
  - •B31.1 Power Piping (Non nuclear)
  - •B31.2 Fuel Gas Piping
  - •B31.3 Chemical Plant and Refinery piping
  - •B31.4 Liquid Petroleum piping
  - •B31.5 Refrigeration piping
  - •B31.7 Nuclear Piping (Superseded by ASME Section III)
  - •B31.8 Gas Transmission Piping
  - •B31.9 Building Service Piping
  - •B31.10 Cryogenic Piping
  - •B31.11 Slurry Piping
- **EUROPEAN PIPING STANDARD:**

  EN 13480 (2002) European Standard for Metallic Industrial Piping
- **RUSSIAN BOILER CODE:**

  РД 10-249-98 «Нормы расчета на прочность стационарных котлов и трубопроводов пара и горячей воды»

PIPING CODES & STANDARDS

NUCLEAR PIPING:

- **ASME B&PV CODE, SECTION III (NB, NC, ND)**
- **GERMAN KTA STANDARD**
- **RUSSIAN PNAE STANDARD**
- **BRITISH BS STANDARD**
- **FRENCH RCCM**
- **JAPAN JSME&JEAG**
- **CANADA CSA/CAN**
- **SWEDEN SKIFS**
- **EUROPEAN PRESSURE EQUIPMENT DIRECTIVE**

Piping Flexibility and Stress Analysis

TYPES OF DESIGN PERMITTED BY THE ASME BPV CODE SECTION III

- Design By Analysis (NB and NC 3200): “Design by analysis” is based on the maximum shear stress theory. In general, linear elastic methods, rules for stress categorization, and appropriate limits are used to evaluate the design loading conditions on a containment vessel. This method also requires a fatigue analysis and fracture mechanics evaluations (prevention of non-ductile failure). “Design by analysis” allows plastic analysis, elastic-plastic analysis, and experimental stress analysis. “Design by analysis” requires a higher degree of engineering than “design by rule” since all aspects of loading must be considered and evaluated

Piping Flexibility and Stress Analysis

TYPES OF DESIGN PERMITTED BY THE ASME BPV CODE SECTION III

- Design by Rule (or Design by Formula) (NB/NC 3600): “Design by rule” is based on a set of simple formulas to determine either the minimum thickness or the maximum allowable working pressure for pressure load conditions. The equations provided in the ASME BPVC are based on the maximum stress theory. The "design by rule" method provides a quick, simple, and nationally recognized method for the design and construction of piping and vessels for pressure service. This reduces engineering costs for vessel design

It should be noted that in Design by Analysis the stresses considered are Stress Intensities, S_m rather than directional S_l or S_h (longitudinal or hoop) or σ_1, σ_2 or σ_3, principal stresses.

STRESS INTENSITIES

Stress intensities for Class 1 components and piping are determined using Tresca criteria as the largest of the following:

$$\mathbf{S_m} = \mathbf{max} \begin{matrix} |\sigma_1 - \sigma_2| \\ |\sigma_2 - \sigma_3| \\ |\sigma_3 - \sigma_1| \end{matrix}$$

where σ_1 and σ_2 are the principal stresses in or parallel to the mid plane of the shell, wall or plate of the component and σ_3 is the principal stress perpendicular to the mid plane of the shell, wall or plate of the component.

STRESS INTENSITIES

Where $\boldsymbol{\sigma_1}$, $\boldsymbol{\sigma_2}$ and $\boldsymbol{\sigma_3}$ stresses are tensile they are taken as a positive and where they are compressive in nature they are taken as a negative value hence, result in an increased stress intensity.

The allowable stress S_m for Design by Analysis is taken as the lesser of ultimate tensile stress for the material in question at temperature from the Tables in ASME B&PVC Section II Part D divided by 3 or 2/3 times yield stress at temperature also from ASME B&PVC Section II Part D.

Piping Flexibility and Stress Analysis

SUBSECTIONS OF ASME BPVC FOR PIPING ANALYSIS

- NB-3600 - Design and analysis for Class 1 pipes. This subsection covers 1 Class pipes working under primary loop pressure.

- NC-3600 - Design and analysis for Class 2 pipes. This Class includes the safety-related systems that do not attached in the 1 Class and are working, for example, in accident cooling of protection systems, steam and feedwater pipes, etc.

- ND-3600 - Design and analysis for Class 3 pipes. For example, a system of technical water should be included in this Class.

- The special requirements for piping supports design and strength analysis are contained in the ASME BPVC Subsection NF-3600 “Design Rules for Piping Supports”.

Piping Flexibility and Stress Analysis

SUBSECTIONS OF ASME BPVC FOR PIPING ANALYSIS

More detailed recommendations and requirements concerned seismic analysis of safety-related NPP piping systems are given in the following Appendixes:

- Appendix N “Dynamic Analysis Methods”;
- Appendix F “Rules for Evaluation of Service Loading with Level D Service Limits”.

Additionally for the main parts of ASME BPVC there is an actually issuing by NRC the special documents, such as RG and SRP. These documents provide specification of requirements for equipment classification, combination of loads and describe a new analysis methods.

Up to now NRC issued more than 35 RG and SRP regarding piping systems.

Seismic Design and Qualification

Seismic Specification:

(a) The scope and boundaries of systems to be seismically designed;

(b) The applicable design and construction code;

(c) The required seismic function of the piping system (position retention, leak tightness, or operability);

(d) The free field seismic input for the design basis earthquake;

(e) the in-structure seismic response spectra;

(f) The operating and design conditions concurrent with the seismic load

Seismic Design and Qualification

Seismic Qualification:

The seismic qualification requirements differ depending on the seismic function of the piping system: operability, leak tightness, or position retention.

Operability: the ability of a piping system to deliver, control (throttle), or shut off flow during or after the design earthquake.

The seismic qualification of piping systems that must remain operable during or following the design basis earthquake must be established by static or dynamic analysis or by testing. The seismic qualification of piping systems for operability must demonstrate the seismic adequacy of the piping itself, the pipe supports and their attachment to the building structure, and the equipment and components within the scope of seismic qualification.

Seismic Design and Qualification

Seismic Qualification:

Leak Tightness: the ability of a piping system to prevent leakage to the environment during or following the earthquake

The requirements for seismic qualification of piping systems that must remain leak tight during or following the earthquake vary with pipe size and the magnitude of seismic input For pipe larger than 2" nominal pipe size (NPS) and for a earthquake with a peak spectral acceleration larger than 0.3g, it is recommended that the seismic design and retrofit requirements for leak tightness be identical to the operability requirements, except for the operability requirements of active equipment, which are not applicable. For piping 2" NFS and smaller, or where the PSA is below 0.3g, the position retention rules may apply for leak tightness, with the additional requirement that the loads imposed on nonwelded and non-flanged pipe joints (for example swage fittings, groove couplings, etc.) be within vendor limits.

Seismic Design and Qualification

Seismic Qualification:

Position retention: the ability of a piping system not to fall or collapse in case of earthquake;

The seismic qualification of piping systems that must retain their position, but need not be leak tight or perform a function, may be established by sway bracing following standard support and restraint spacing criteria. Also the seismic adequacy of the pipe supports and their attachment to the building structure should be established. The seismic load on each pipe support should be calculated by seismic analysis, and the seismic adequacy of supports and anchorage for position retention should be demonstrated against failure modes that could cause loss of position. The permanent deformation of supports is acceptable in this case, provided it does not cause the pipe to disengage and fall off.

Seismic Design and Qualification

Seismic Qualification Criteria:

Criterion	Operability	Leak Tight (NPS>2" PSA > 0.3g)	Leak Tight (NPS≤2" PSA ≤ 0.3g)	Position Retention
Pipe Stress	Yes	Yes	No	sway bracing
Mechanical Joints	Yes	Yes	Yes	No
Equipment Anchored	Yes	Yes	Yes	Yes
Equipment Operable	Yes	No	No	No
Restraints	Yes	Yes	Yes	Yes
Interactions	Yes	Yes	Yes	Yes

Seismic Design and Qualification

Material Condition:

The seismic retrofit of existing piping systems should take into account the material condition of the system. Where corrosion or environmental cracking are suspected, the piping should be inspected by non-destructive volumetric techniques. The quality of construction and the maintenance condition of the system should be inspected in the field, and the maintenance record of equipment and components should be investigated with the facility engineer to assess their adequacy, operability and structural integrity.

Seismic Design and Qualification

Interactions:

An interaction is the seismic induced failure of a structure, system or component, other than the piping systems being qualified, that affects the function of the piping system. An interaction source is the component or structure that could fail and interact with a target. An interaction target is a component that is being impacted, sprayed or accidentally activated. A credible interaction is one that can take place. A significant interaction is one that can result in damage to the target. There are four types of seismic interactions:

Seismic Design and Qualification

Interactions:

Falling - A falling interaction is an impact on a critical component due to the fall of overhead or adjacent equipment or structure.

Swing - A swing or sway interaction is an impact due to the swing or rocking of adjacent component or suspended system.

Spray - A spray interaction is spray or flooding due to the leakage or rupture of overhead or adjacent piping or vessels.

System - A system interaction is an accidental or erroneous signal resulting in unanticipated operating conditions, such as the unintended start-up of a pump or closure of a valve.

Seismic Design and Qualification

Documentation:

The designer should prepare a Qualification Report, certified by a Professional Engineer experienced in the field of piping systems design and construction, and in seismic qualification. The Qualification Report should include, as a minimum:

(a) Drawing, sketches and (for existing systems) photographs, showing the scope of work;

(b) Final pipe support arrangement;

(c) Calculations showing design input (acceleration, static force, or response spectra) and code compliance for piping, equipment, and supports;

(d) Documentation of qualification of equipment operability where applicable;

(e) Drawings for new or modified supports, with dimensions, weld and anchor bolt details, bill of materials, and information necessary for material procurement and construction.

Seismic Design and Qualification

Seismic Input:

- design ground response spectra;
- in-structure response spectra;
- acceleration time histories (accelerograms);
- seismic anchor movements

Seismic Design and Qualification

Seismic Input

Floor (In-Structure) Response Spectra

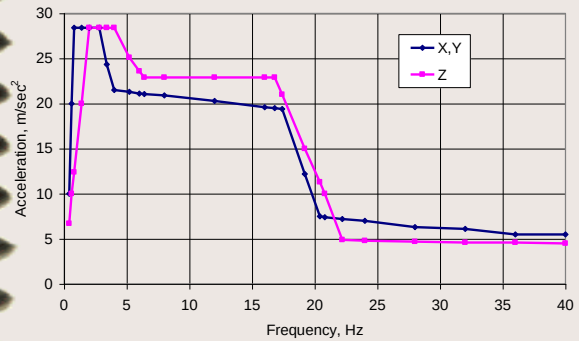

- Enveloped and Broadened 15 %,
- Set of Spectra for different damping

Accelerograms

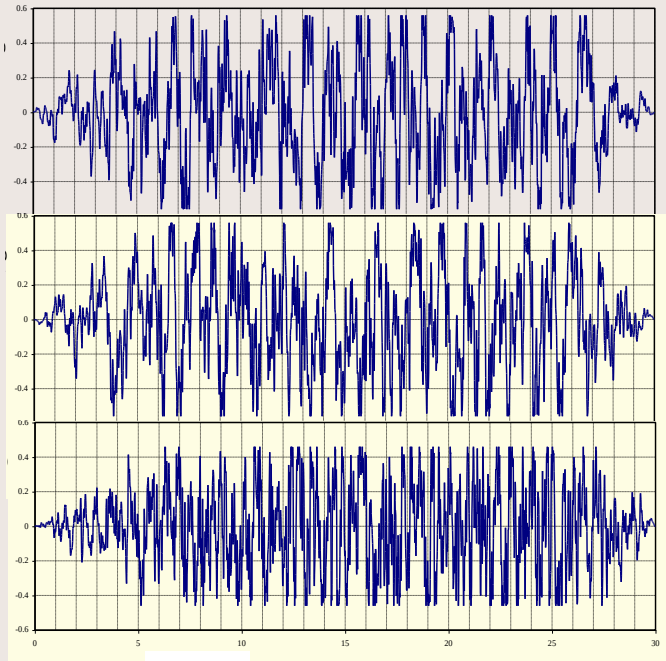

- Cross-Correlation of the Spatial Components
- Comparison of Calculated and Target Spectra;
- Duration of intensive part

Seismic Anchor Movement

Seismic Design and Qualification

Acceptance Criteria for the developing of artificial acceleration time histories

1. **Enveloping of target spectra:** the response spectra of the generated time histories should envelop the floor response spectra. Specifically, less than 5 points (no more than 10 %) shall fall below the target spectra.

2. The response spectra of the generated artificial time history should envelop the design response spectra **for all damping values used in the analyses**,

3. **Frequency intervals** at which the spectral values are calculated should be detailed enough. Generally frequency spacing should comply to the values presented in the Table below :

Seismic Design and Qualification

Acceptance Criteria for the developing of artificial acceleration time histories

Frequency intervals for calculation of response spectrum

Frequency range (Hz)	Increment (Hz)
0,2 - 3	0,10
3,- 3,6	0,15
3,6 - 5	0,20
5 - 8	0,25
8 - 15	0,50
15 - 18	1
18 - 22	2
22 - 40	3

Seismic Design and Qualification

Acceptance Criteria for the developing of artificial acceleration time histories

4. To be considered **statistically independent**, the directional correlation coefficients between pairs of records shall not exceed a value of 0.30

5. The resultant time history should be **long enough** so that further increases in its length will not produce significantly different response spectra.

6. **Strong motion durations** should be not less than 10 sec.

7. The artificial time histories shall be **baseline corrected**

8. The time history shall have a **sufficiently small time increment**

Seismic Design and Qualification

Acceptance Criteria for the developing of artificial acceleration time histories

References:

- European utility requirements for LWR Nuclear Power, Volume 2 "Generic Nuclear Island Requirements", Appendix A "Method of Seismic Analysis"
- ASCE/SEI 43-05, Seismic Design Criteria for Structures, Systems, and Components in Nuclear Facilities
- ASME BPVC, Appendix N "Dynamic Analysis Methods"
- ASCE 4-98. "Seismic Analysis of Safety-Related Nuclear Structures and Commentary."
- NUREG-0800. “Standard Review Plan. Paragraph 3.7.1. Seismic Design Parameters.”
- IEEE Std 344-2004. ”IEEE Recommended Practice for Seismic Qualification of Class 1E Equipment for Nuclear Power Generating Stations

Seismic Design and Qualification

Load Combination

Piping:

$$P + D + L + E_S$$

Piping Supports, Equipment Nozzles:

$$D + L + E_S + E_{SAM} + TE$$

P – Internal Pressure, D – Dead Weight,

L – Live Weight, E_S – Seismic Inertial Load,

E_{SAM} – Loads from Seismic Anchor Movement,

TE – Operational Load (Thermal Expansions)

Seismic Design and Qualification

Conditions that caused piping failures (Rules of Thumb):

- Unacceptable anchor motion;
- Rigidly tied branch lines and flexible header;
- Poor Horizontal restraining;
- Too long valve operators;
- Poor Material conditions;
- Poor Construction quality;
- Undersized pipe support members;
- Significant Interactions

Seismic Design and Qualification

Table 2 Maximum Span, ft (m), Between Lateral Seismic Restraints for Steel Pipe With a Yield Stress of 35 ksi (238 MPa), in Water Service at 70°F (21°C)

		Maximum Span, ft (m)				
NPS (DN)	L_T, ft (m)	0.1 *g*	0.3 *g*	1.0 *g*	2.0 *g*	3.0 *g*
1 (25)	7 (2.1)	24 (7.2)	18 (5.4)	13 (3.9)	11 (3.3)	9 (2.7)
2 (50)	10 (3)	34 (10.2)	26 (7.8)	19 (5.7)	16 (4.8)	13 (3.9)
3 (80)	12 (3.6)	41 (12.3)	31 (9.3)	23 (6.9)	19 (5.7)	15 (4.5)
4 (100)	14 (4.2)	48 (14.4)	37 (11.1)	27 (8.1)	22 (6.6)	18 (5.4)
6 (150)	17 (5.1)	58 (17.4)	44 (13.2)	32 (9.6)	27 (8.1)	22 (6.6)
8 (200)	19 (5.7)	65 (19.5)	50 (15)	36 (10.8)	30 (9)	25 (7.5)
12 (300)	23 (6.9)	79 (23.7)	60 (18)	44 (13.2)	37 (11.1)	30 (9)
16 (400)	27 (8.1)	93 (27.9)	70 (21)	52 (15.6)	44 (13.2)	35 (10.5)
20 (500)	30 (9)	103 (30.9)	78 (23.4)	58 (17.4)	48 (14.4)	39 (11.7)
24 (600)	32 (9.6)	110 (33)	84 (25.2)	62 (18.6)	52 (15.6)	42 (12.6)

(ASME B31E “Standard for the Seismic Design and Retrofit of Above-Ground Piping Systems”)

Seismic Design and Qualification

$$L_{max} = \text{the smaller of } 1.94 \times \frac{L_T}{a^{0.25}} \text{ and } 3.33 \times L_T \times \sqrt{\frac{S_y}{a}}$$

a = peak spectral acceleration, largest in any of the three directions, including in-structure amplification, g

L_{max} = maximum permitted pipe span between lateral seismic restraints, m

L_T = reference span, the recommended span between weight supports, from ASME B31.1, Table 121.5 (reproduced in Table 2), m

S_Y = material yield stress at operating temperature, MPa

(ASME B31E "Standard for the Seismic Design and Retrofit of Above-Ground Piping Systems")

Seismic Design and Qualification

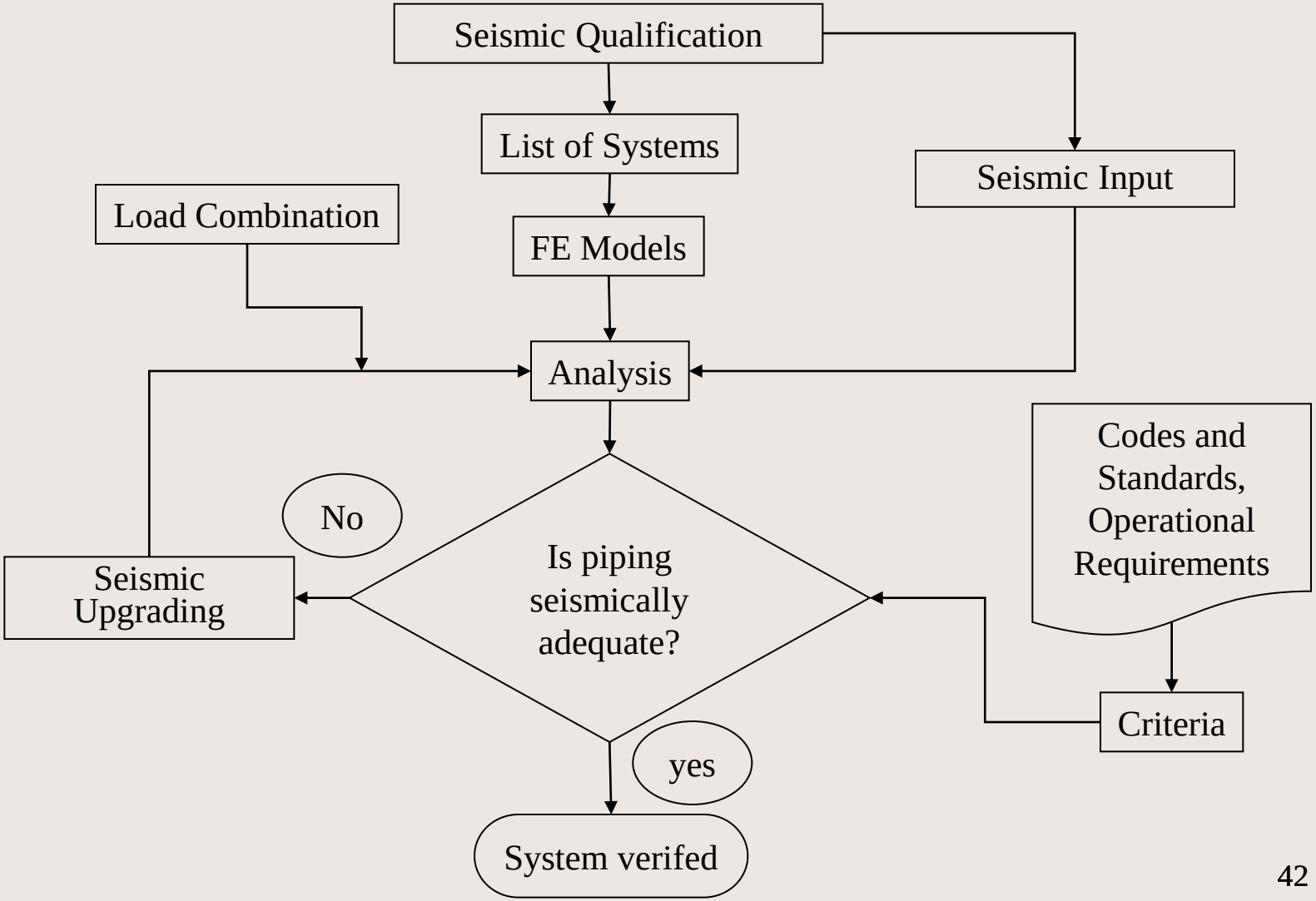

Peculiarities of piping systems modeling for seismic analysis:

Density of FE model:

$$L_{\min} = \frac{1}{2}\sqrt{\frac{\pi}{2*FMAX}} * \sqrt[4]{\frac{E*I*g}{w}}$$

FMAX	–	*"Upper" natural frequency of the system*
E	–	*Elastic Modulus*
I	–	*Moment of Inertia*
g	–	*Gravity acceleration*
w	–	*Weight per length*

Decoupling Criteria (Standard Review Plan 3.7.2 “Seismic System Analysis”)

Dxt	57*3	76*4.5	89*5	108*5	133*6	159*6	219*10	273*11	325*12	377*6	377*8	426*8	530*8	630*8
57*3														
76*4.5														
89*5														
108*5														
133*6														
159*6														
219*10									**2**					
273*11														
325*12														
377*6														
377*8		**1**												
426*8														
530*8														
630*8														

Service Limits

- ASME BPVC establishes four Levels of Service Limits Loading for each component or support. These Service Limits may be designated in the Design Specification and defined as different Levels (Levels A, B, C and D).
- The NCA-2142.4 gives the following definition of these Service Limits:
- **Level D Service Limit**. Level D Service limits are those sets of limits which must be satisfied for all Level D Service loading identified in the Design Specification for which these Service Limits are designated. These sets of limits permit gross general deformations with some consequent loss of dimensional stability and damage requiring repair, which may require removal of the component from service. Therefore the selection of this limits shall be reviewed by the Owner for compatibility with established system safety criteria (NCA-2141).

Definition of Seismic Loads

- The ASME BPVC has a several subsections especially oriented for seismic analysis and design. Among them one of the most important is the Appendix N “Dynamic Analysis Methods”, which contains the article “Seismic analysis”. In this article there are the following items:
- **N-1210** - “Earthquake description“. This article contains the detailed description and recommendations about applied input seismic excitation in terms of the Response Spectrum and Time History as well.
- **N-1220** - “Methods of dynamic analysis“. This chapter gives a full range of dynamic modeling and analysis technique description such like THA and Response Spectrum Method.
- **N-1230** - "Damping”. The recommended damping values for different types of constructions are presented in this article. Also the various methods of incorporating the damping in structural dynamics are given.

DAMPING VALUES FOR PIPES ACCORDING TO ASME BPVC

ASME BPVC provides the different values of damping which are depended from the seismic excitation level and pipe output diameter. In the Japan JEAG 4601 the damping values depends on type of piping, number of supports and insulation parameter and vary from 0,5 to 2,5%.

Table demonstrates ASME BPVC values and contains the damping ratio values recommended for seismic analysis.

Application of the Case N-411-1 may significantly reduce the seismic response up to 30-35 % in comparison with values originally used in ASME BPVC.

Pipe	Level B	Level D		Case N-411-1	
	OBE	SSE	0 - 10 Hz	10 - 20 Hz	> 20 Hz
D > 305mm	0.02	0.03	0.05	0.05 - 0.02	0.02
D < 305mm	0.01	0.02	0.05	0.05 - 0.02	0.02

ASME BPVC, NB-3650, Equation (9)

Resulting Moment from static and dynamic loads

$$M_i = \sqrt{M_{xi}^2 + M_{yi}^2 + M_{zi}^2}$$

For the tee elements the Equation (9) is written in the following form (NB-3683.1)

$$S_{SS} = B_1 \frac{PD_o}{2T_r} + B_{2b} \frac{M_b}{Z_b} + B_{2r} \frac{M_r}{Z_r}$$

where: T_r - nominal wall thickness of designated RUN pipe;

M_r, M_b - resulting internal moments in the run and branch pipes respectively;

Z_r,Z_b - approximate section modulus of designated run and attached branch pipes respectively.

Stress indices B1 and B2
(defined by the table NB-3681(a)-1)

For straight pipes: $B_1 = 0.5$ and $B_2 = 1.0$;

For curved pipes: $B_1 = -0.1 + 0.4h$, if $0.0 < B_1 < 0.5$,

$$B_2 = 1.30 \Big/ h^{\frac{2}{3}} \quad \text{if} \quad B_2 > 1.0;$$

For tee elements B_{2b} and B_{2r} are defined in accordance with NB-3683.8 and NB-3683.9 /3/.

ASME BPVC (NB/NC/ND-3600)

NB-3656 Consideration of Level D Service Limits

The conditions of eq. (9) of NB-3652 shall be met using Service Level D coincident pressure *P* and moment *Mi*, which results in the maximum calculated stress. The allowable stress to be used for this condition is 3.0 *Sm*, but not greater than 2.0 *Sy*.

$$B_1 \frac{PD_o}{2t} + B_2 \frac{D_o}{2I} M_i \leq 1.5 S_m$$

ASME BPVC (NB/NC/ND-3600)

FIG. NB-3622-1 EXAMPLES OF REVERSING AND NONREVERSING DYNAMIC LOADS

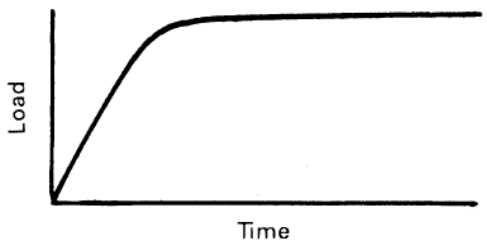

(a) Nonreversing Dynamic Load
(Relief/Safety Valve Open End Discharge)

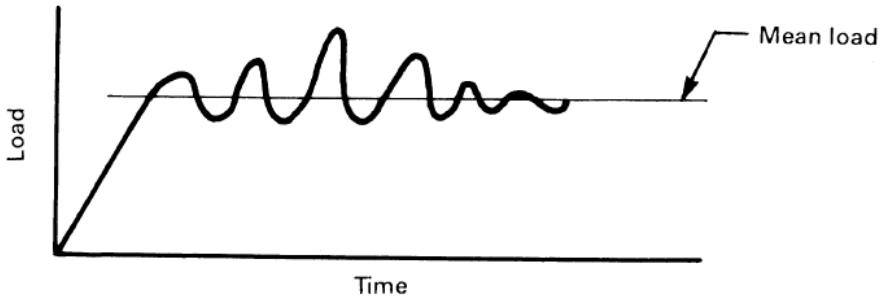

(c) Nonreversing Dynamic Load
(Initial Water Slug Followed By Reflected Waves)

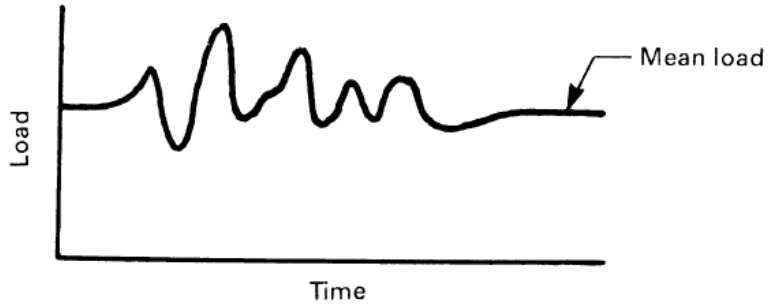

(b) Reversing Dynamic Load
(Earthquake Load Cycling About Normal Operating Condition)

ASME BPVC (NB/NC/ND-3600)

NB-3656 Consideration of Level D Service Limits

An alternative to NB-3656(a):

- piping fabricated from ductile material (P-1 – P-9)
- D/tn≤ 40
- The sustained stresses due to weight are limited:

$$B_2 \frac{D_O}{2I} M_W \leq 0.5\ S_m$$

- The stress due to weight and inertial loading due to reversing dynamic loads:

$$B_1 \frac{P_D\ D_O}{2t} + B_2' \frac{D_O}{2I} M_E \leq 3\ S_m$$

- Seismic anchor motion:

$$C_2 \frac{M_{AM}\ D_O}{2I} < 6.0 S_m$$

$$\frac{F_{AM}}{A_M} < S_m$$

PIPING ANALYSIS SOFTWARE

- ME-21,
- ADLPIPE,
- NUPIPE,
- PIPESTRESS,
- SYSPIPE
- CAESARII,
- AUTOPIPE,
- TRIFLEX,
- SIMFLEX,
- CAEPIPE,
- dPIPE

Seismic Restraints

1. Sway Braces

2. Snubbers

2a. Hydraulic

2б. Mechanical

Seismic Restraints

3. Axial dampers (absorbers)

3a. Hydraulic

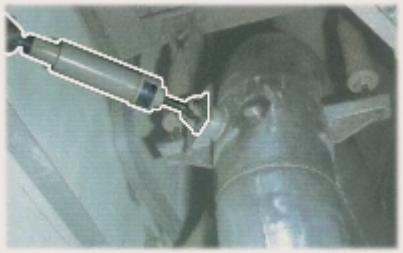

3б. Elastic-plastic

4. Viscous Dampers

General requirements for seismic restraints

- Damping ability for any dynamic effects (vibration, shock, seismic, etc.);
- Long service life without maintenance;
- Resistance to the heat and radiation;
- A small reaction force acting on the piping during thermal expansion;
- The absence of lag response under dynamic loading;
- The ability for overload without loss of functionality and mechanical properties;
- Ability to control performance;
- The low cost of manufacture and operation

Description of High Viscous Damper

High damping in the device is a result of deformation of an extremely high viscous liquid that is located in the space between damper's piston and housing.

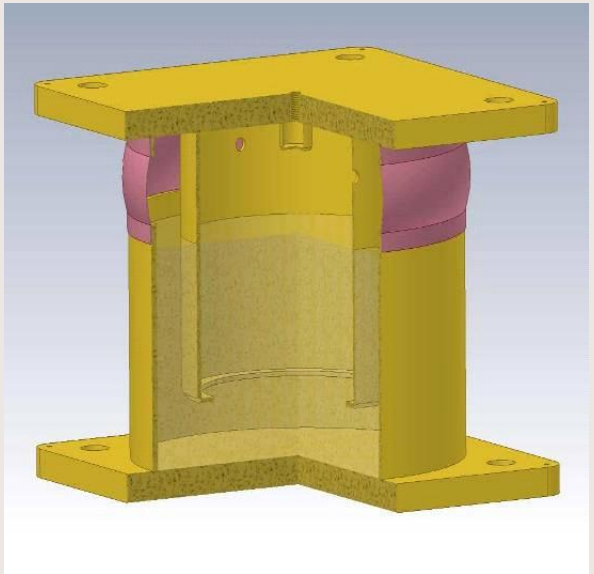

Description of High Viscous Damper

VES TYPE
TEMPERATURE DEPENDENT DAMPER

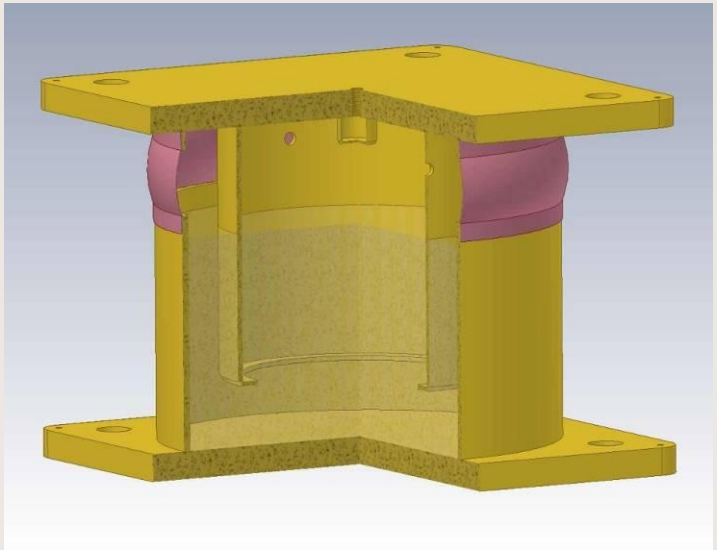

VD TYPE
LOW TEMPERATURE DEPENDANT VARIABLE DAMPING DAMPER

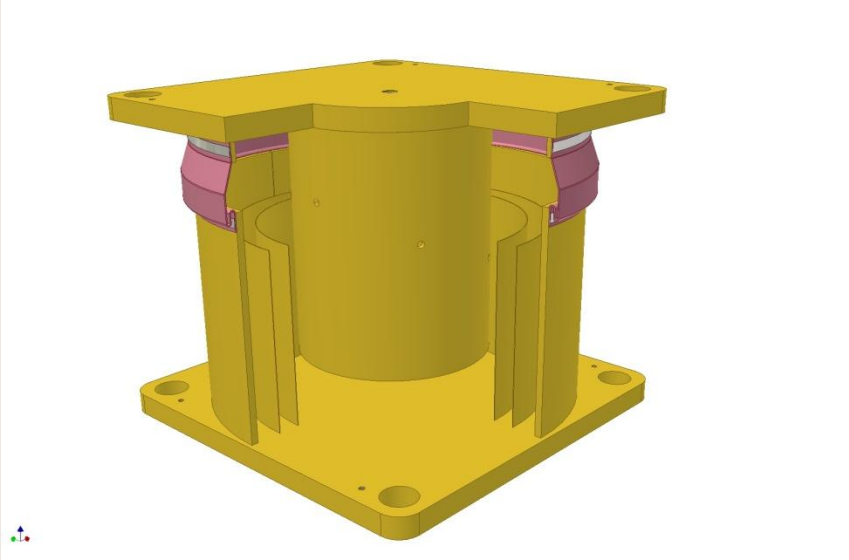

Installation of Dampers

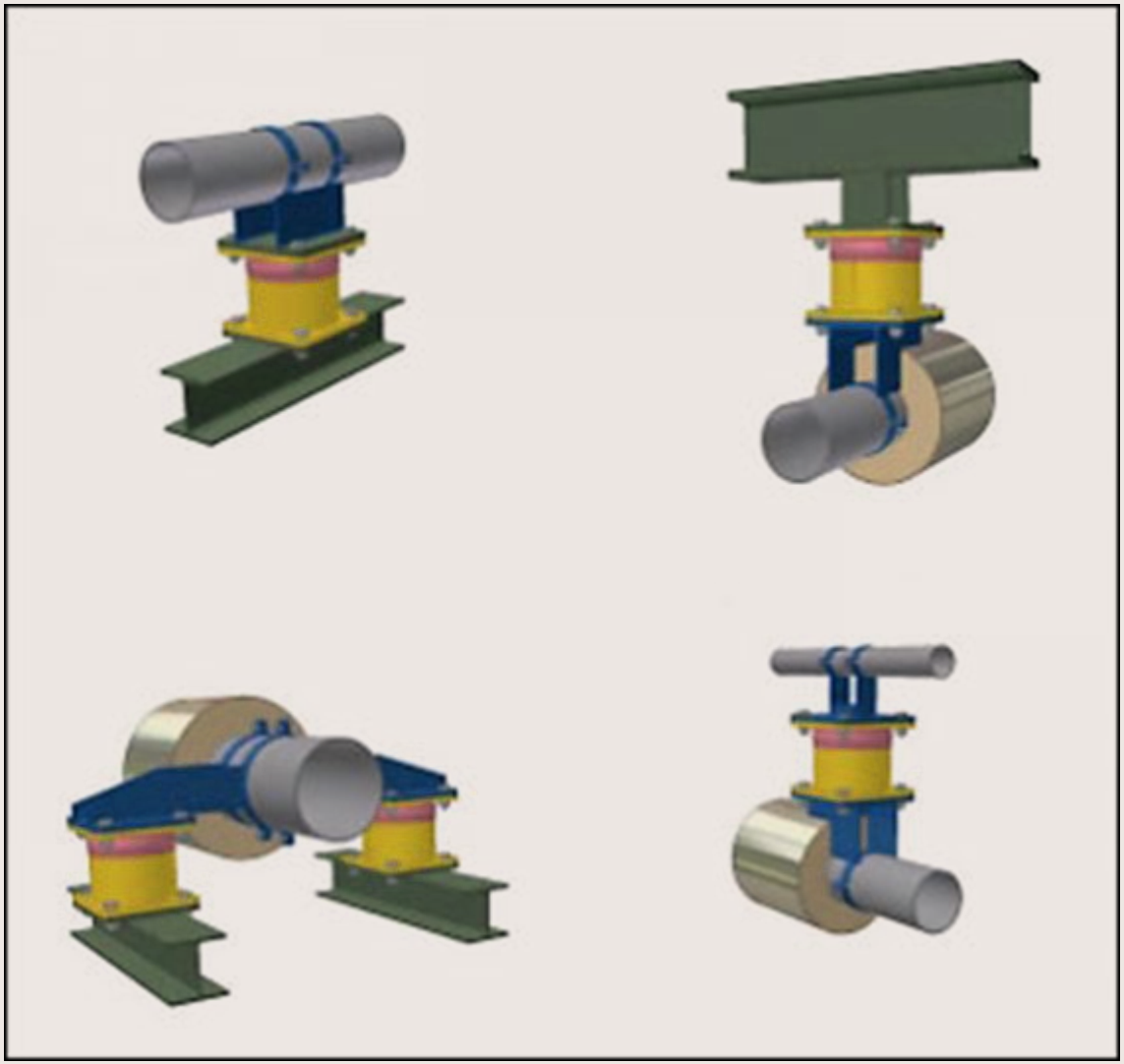

Installation of Dampers

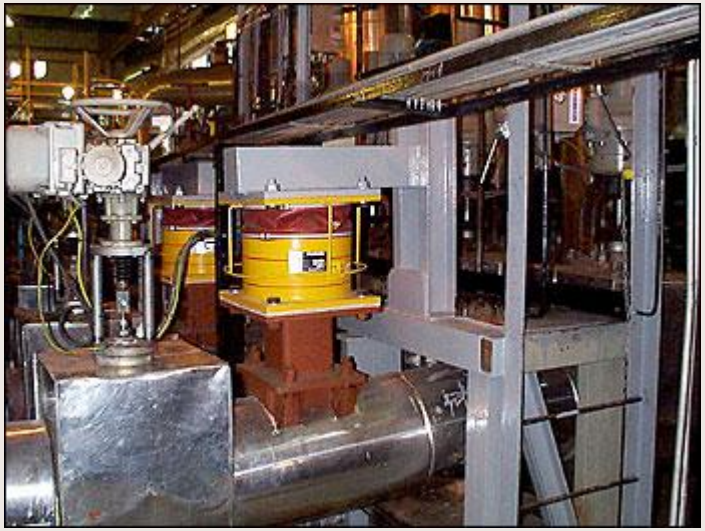

Installation of Dampers

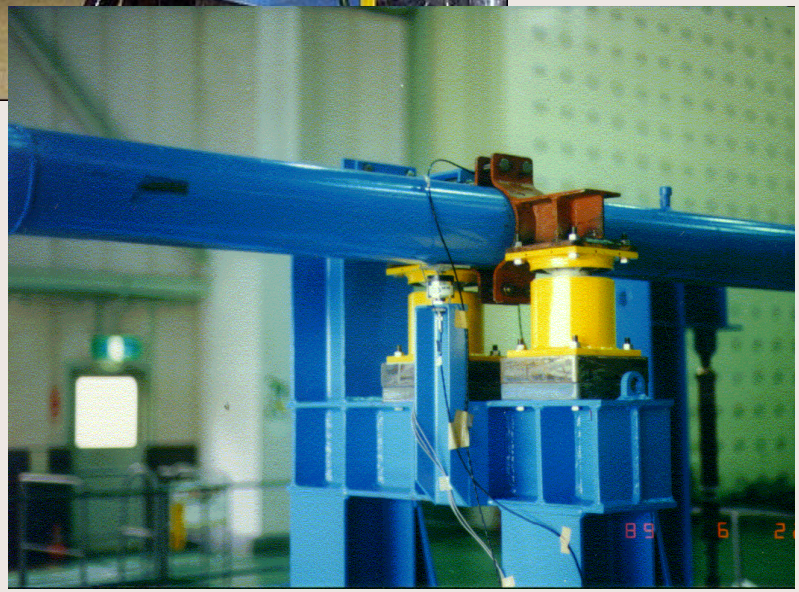

Modeling of seismic restraints

<u>1. Sway Braces and Snubbers</u>

- Axial stiffness
- Inactive under Normal Operation (Snubbers)

<u>2. Hydraulic Axial dampers (absorbers)</u>

- Axial load
- reaction delay
- the nonlinear dependence of force from the loading rate

<u>3. Elasto-plastic axial dampers (absorbers)</u>

- Axial load
- Initial gap
- Elasto-plastic model

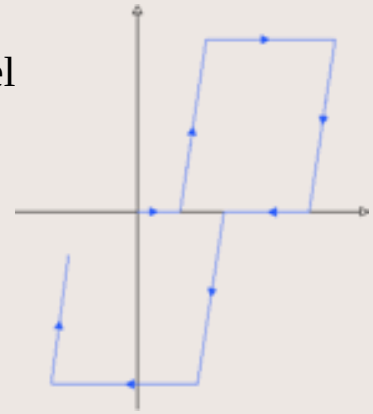

<u>4. High Viscous Damper</u>

- 3D loads
- Maxwell model

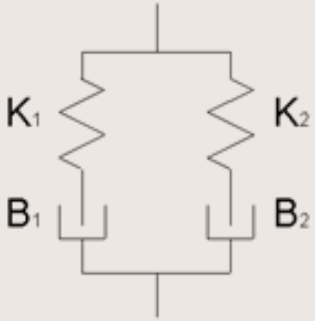

Mathematical Model of HVD

Specific peculiarity of HVD is significant dependence of damping and stiffness characteristics against frequency of excitation:

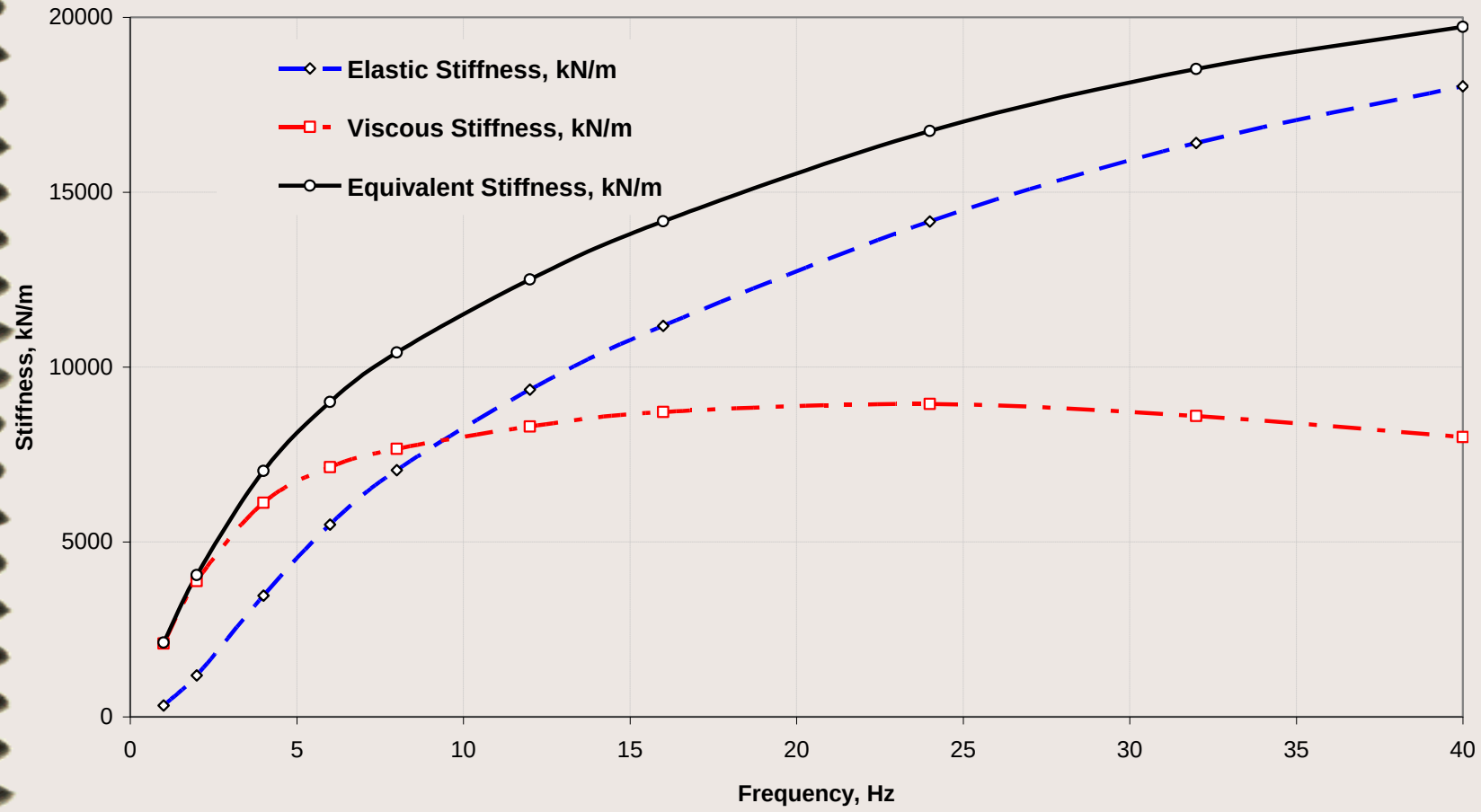

Mathematical Model of HVD

Features of Maxwell Model for HVD :

- the reaction of HVD at the low frequency loading range is considered as a viscous and may be described by an expression: **R = -B*v**, where R – reaction force, v –velocity of a piston relatively to the housing, B – damping resistance;
- for the high frequency range the damper's reaction shows essentially elastic character and may be described as: **R = -K*x**, where x – relative displacement "piston-hosing", K – stiffness ratio

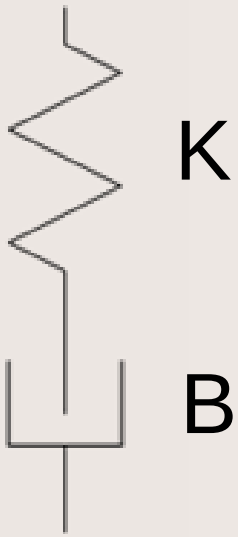

Mathematical Model of HVD

$\omega_0 = K/B$ - characteristic frequency

$R = x_0 * C_e * \sin(\omega * t) + x_0 * C_v * \cos(\omega * t)$

$R = x_0 * C_s * \sin(\omega * t + \varphi)$; $tg(\varphi) = C_v/C_e$; $C_s = (C_e^2 + C_v^2)^{1/2}$

$C_e = K*(\omega/\omega_0)^2/(1 + (\omega/\omega_0)^2)$; $C_e = K*(\omega/\omega_0)/(1 + (\omega/\omega_0)^2)$

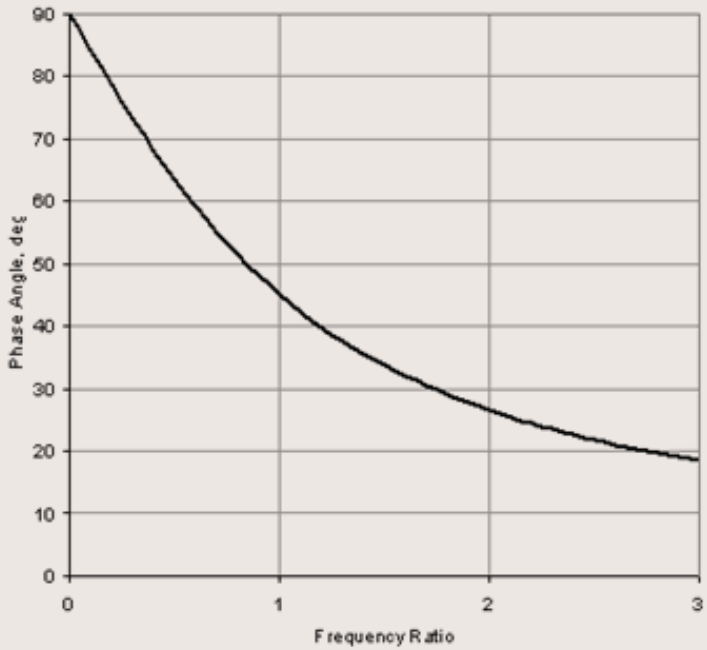

Phase Angle

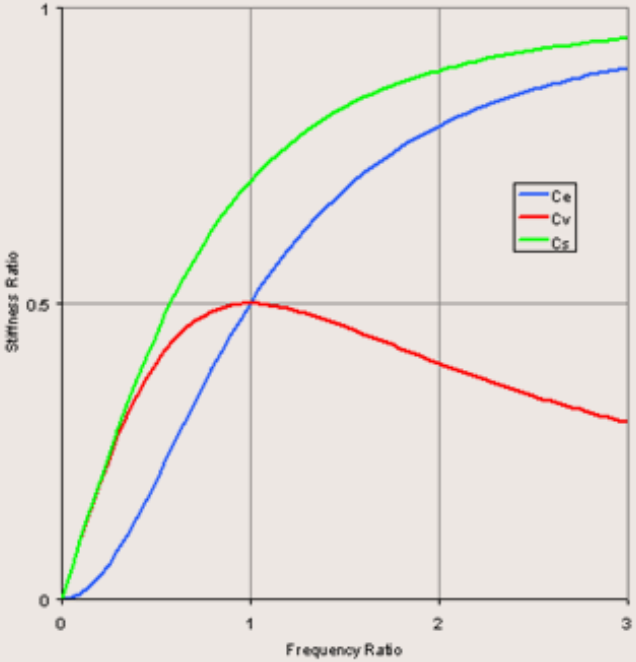

Maxwell Model Characteristics

Mathematical Model of HVD

<u>4-parametrical Maxwell Model:</u>

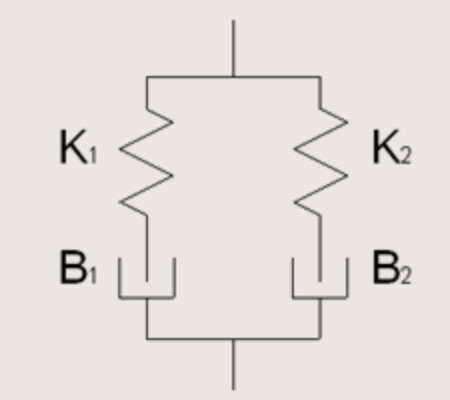

$$Ce = K_1*(\omega/\omega_1)^2/(1 + (\omega/\omega_1)^2) + K_2*(\omega/\omega_2)^2/(1 + (\omega/\omega_2)^2)$$

$$Cv = K_1*(\omega/\omega_1)/(1 + (\omega/\omega_1)^2) + K_2*(\omega/\omega_2)/(1 + (\omega/\omega_2)^2)$$

$$\left.\begin{array}{l}\omega_1 = K_1/B_1 \\ \omega_2 = K_2/B_2\end{array}\right\}$$ characteristic frequencies for first and second Maxwell chains

Mathematical Model of HVD

4-parametrical Maxwell Model:

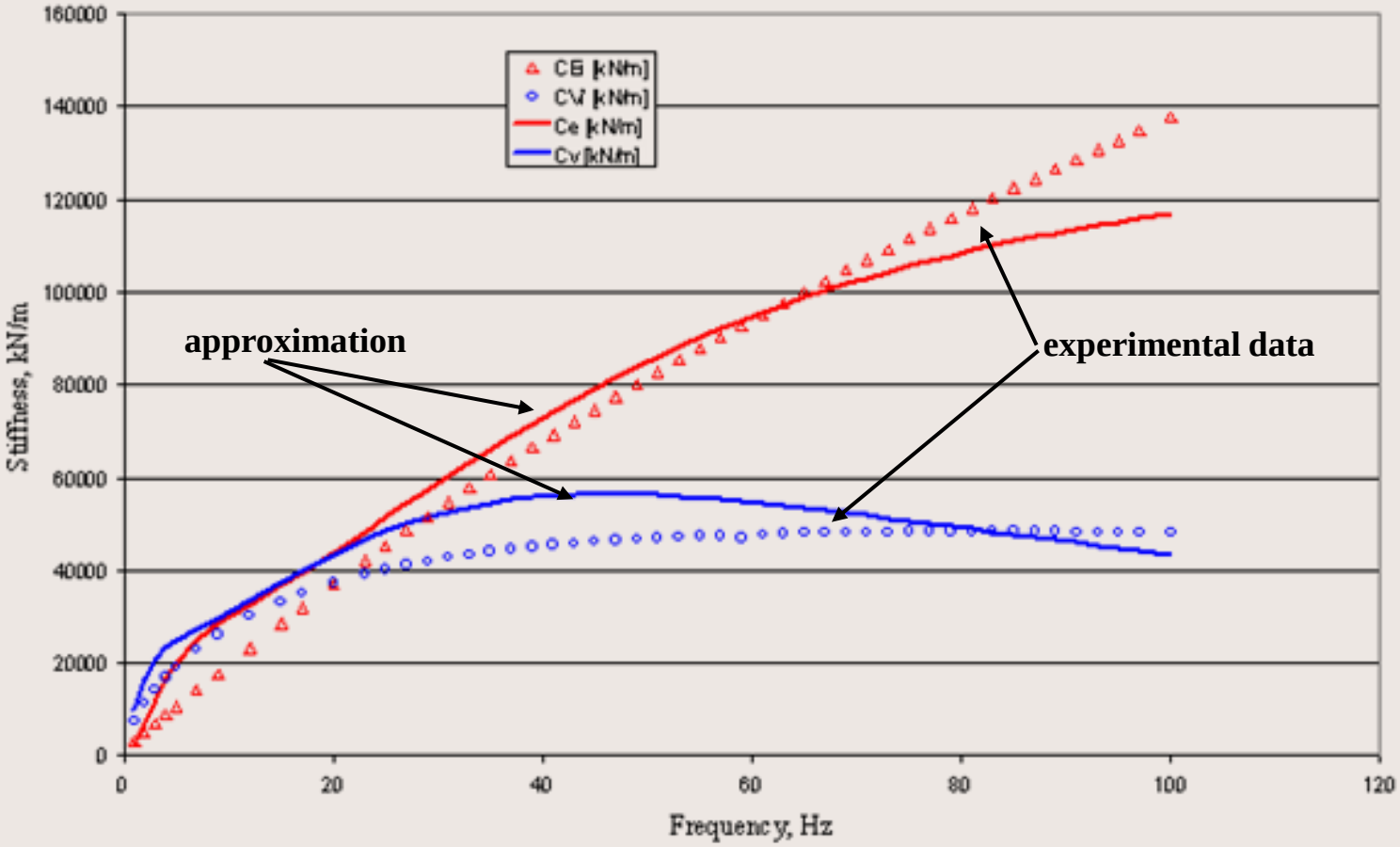

Simplified Model of HVD

- 4-parametrical Maxwell model is suitable for realization in the frame of the Time History Analysis (THA);
- Maxwell model of HVD is realized only in a few software packages: ROHR2 and dPIPE;
- most commercially available piping software packages still use for dynamic restraints only "snubber" model;
- the benefits of "snubber“ modeling is a possibility to implement conventional response spectrum (RSM) method for a solution;
- such approach neglects damping introduced by HVD in piping system;

Simplified Model of HVD

1. Locate dampers along pipeline

2. Suggest initial damper's "character frequencies" *F_char* for each damper and calculate corresponding equivalent damper stiffnesses K_d

3. Add values of damper's stiffness K_d in global stiffness matrix K of system and find piping natural frequencies ω and mode shapes Φ:

$$\Phi^T (K + K_d)\Phi = \left\{\omega_k^2\right\}$$

4. Calculate piping modal response from given FRS and re-calculate new damper's "character frequencies" as:

$$F_{char}^k = \frac{\sum_{i=1}^{n} \phi_i^2 \cdot K_i \cdot F_i}{\sum_{i=1}^{n} \phi_i^2 \cdot K_i}$$

5. For each damper calculate the ratio:

$$R_i = \left| \frac{F_{char_i}^{k-1} - F_{char_i}^{k}}{F_{char_i}^{k}} \right|$$

Check condition

$$R_i^{\max} < \varepsilon$$

No

Yes

Complete Analysis

Numerical Examples

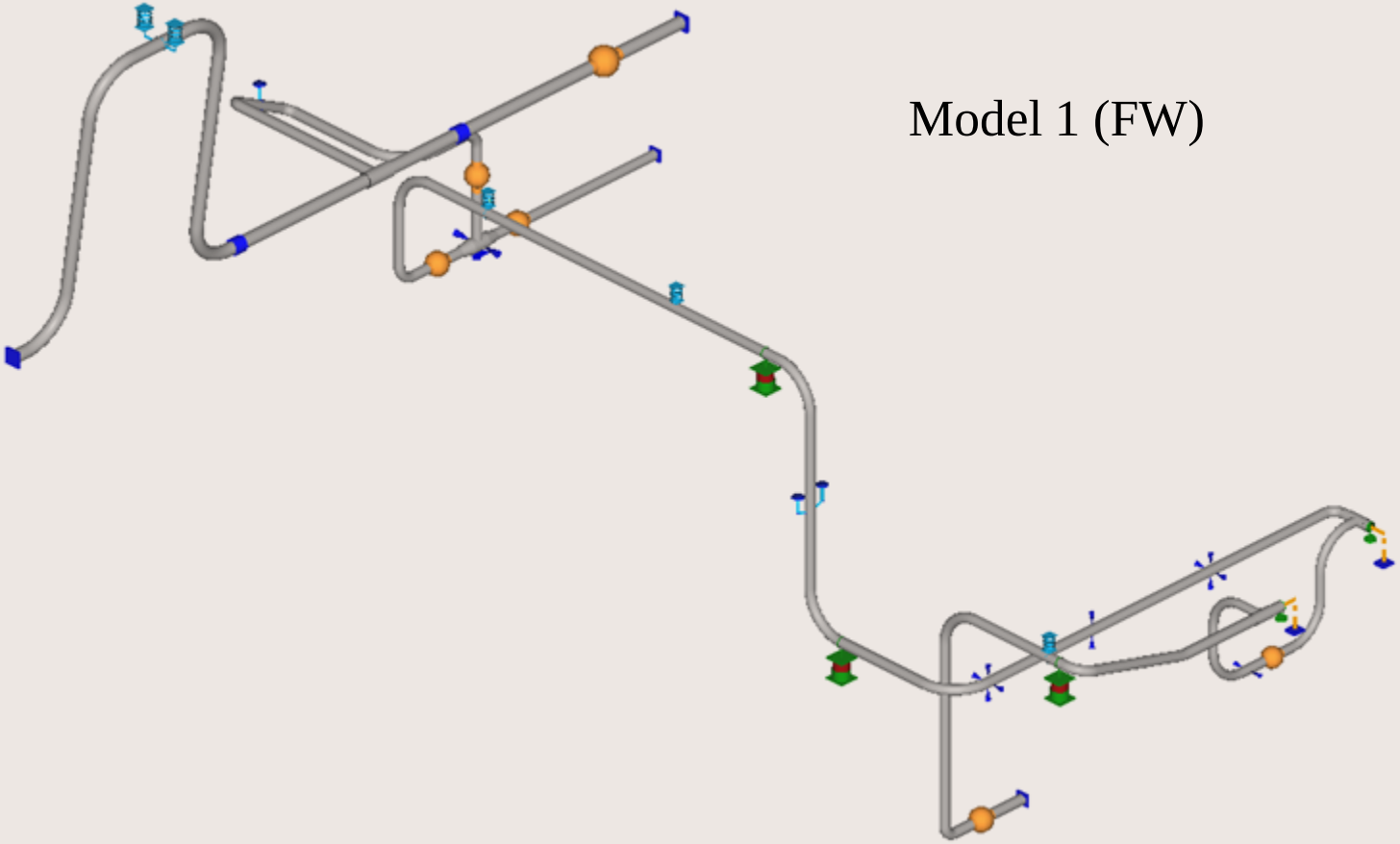

Model 1 (FW)

Conventional Power Plant Feed Water Line DN200 – DN250	43 natural frequencies from 1.15 Hz	3xVD-325/219-7

Numerical Examples

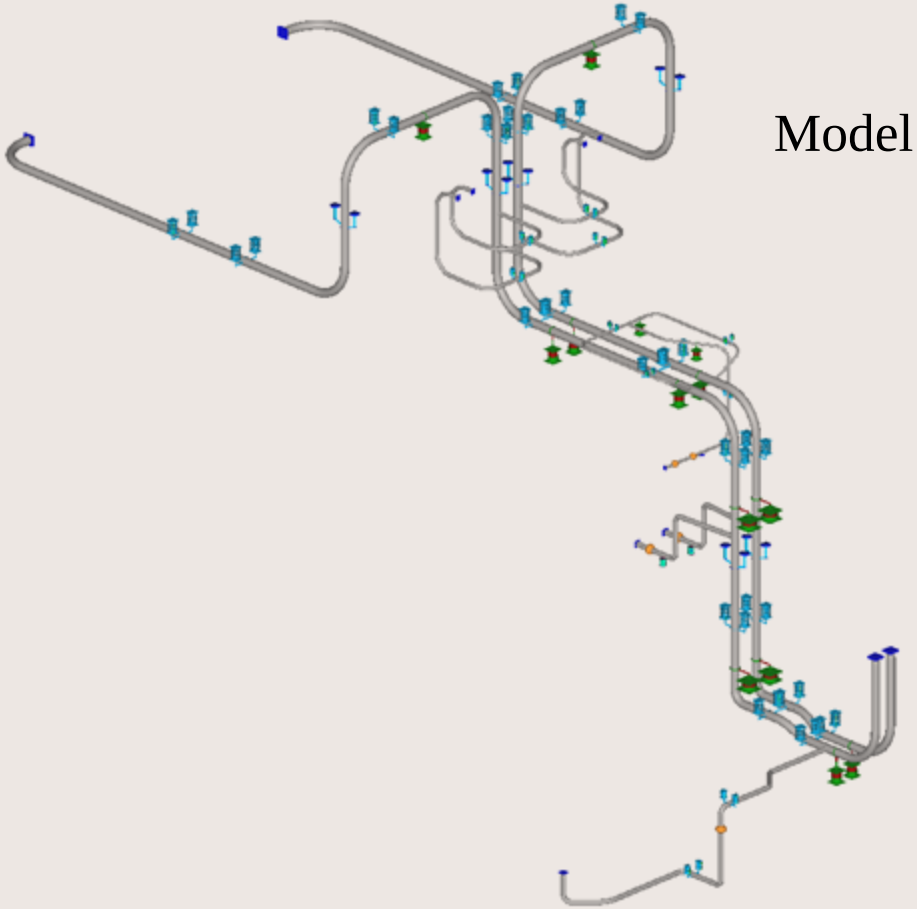

Model 2 (HPP)

Conventional Power Plant High Pressure and Temperature Steam line (from DN150 – DN400)	142 natural frequencies from 0.64 Hz	14 HVD: from VD-159/76-7 to VD-426/219-15

Numerical Examples

Model 3 (IS)

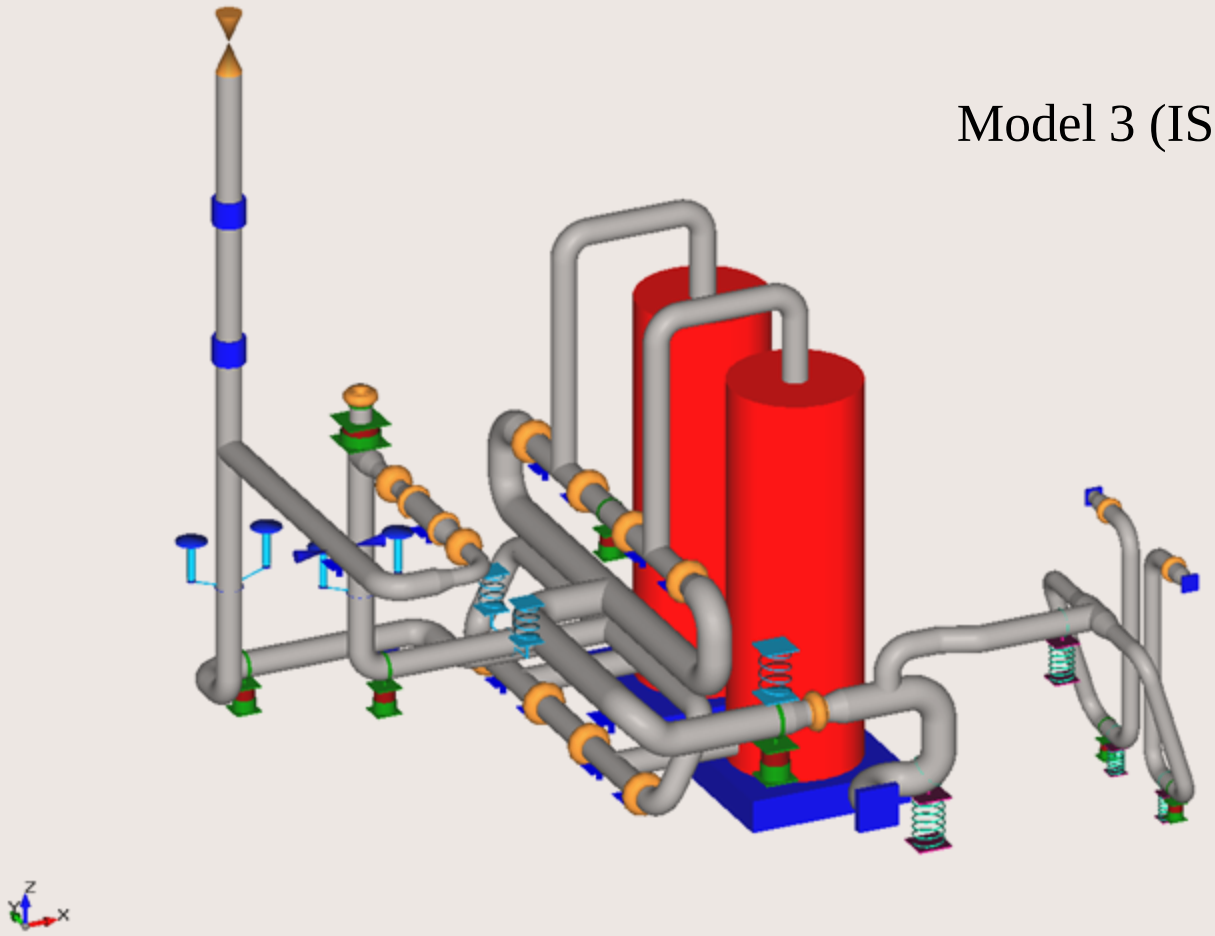

Industrial Piping (DN400 – DN800)	58 natural frequencies from 1.94 Hz	7 HVD: from VD-325/219-7 to VD-630/426-15

Numerical Examples

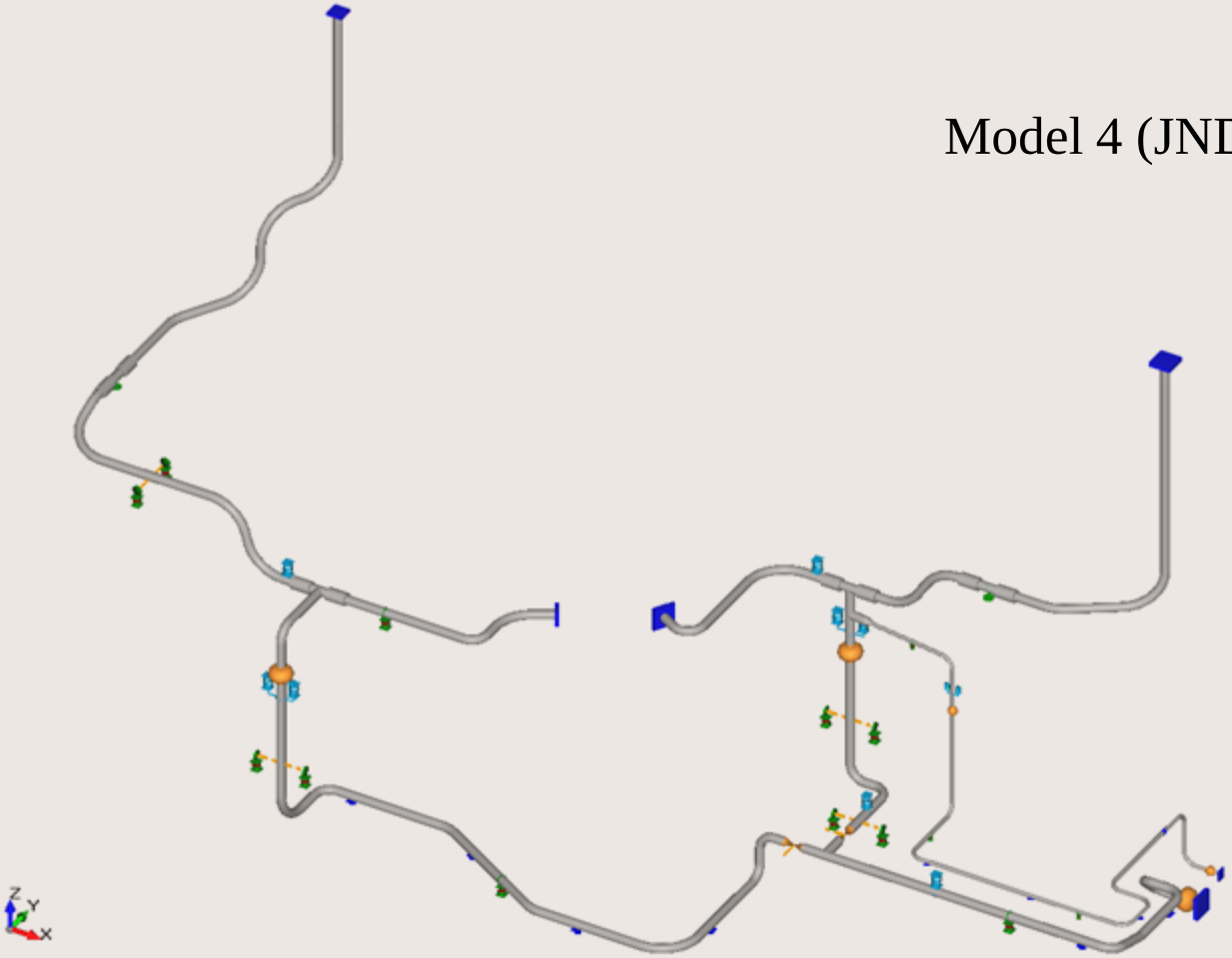

Nuclear Safety Related Piping (DN150 – DN300)	93 natural frequencies from 0.85 Hz	3xVD-325/219-7 + 11xVD-426/325-7

Numerical Examples

Model 5 (KO)

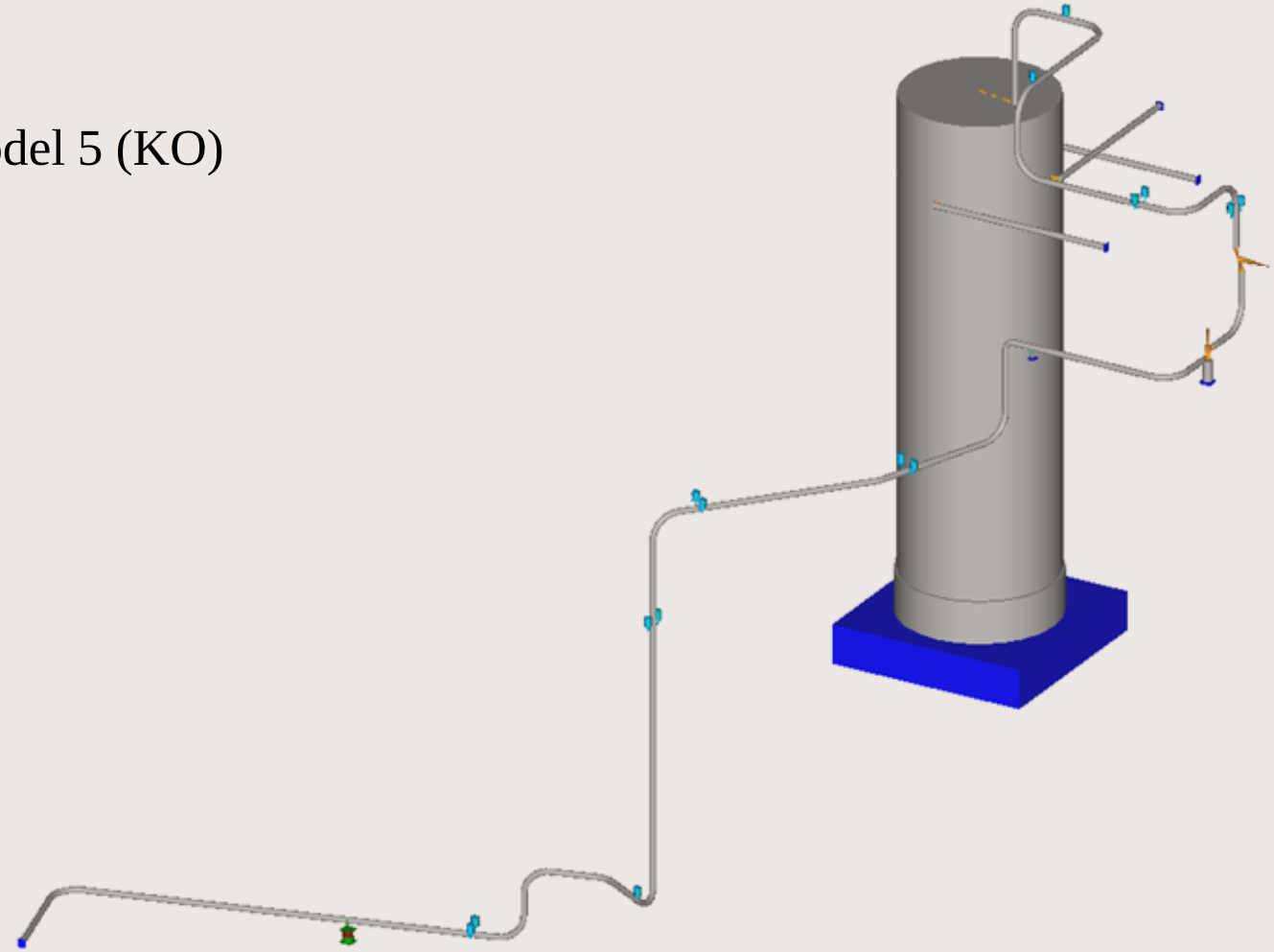

Nuclear Class 1 Piping (Pressurizer system), DN100	40 natural frequencies from 0.75 Hz	1xVD-219/108-7

Statistical processing of analysis results

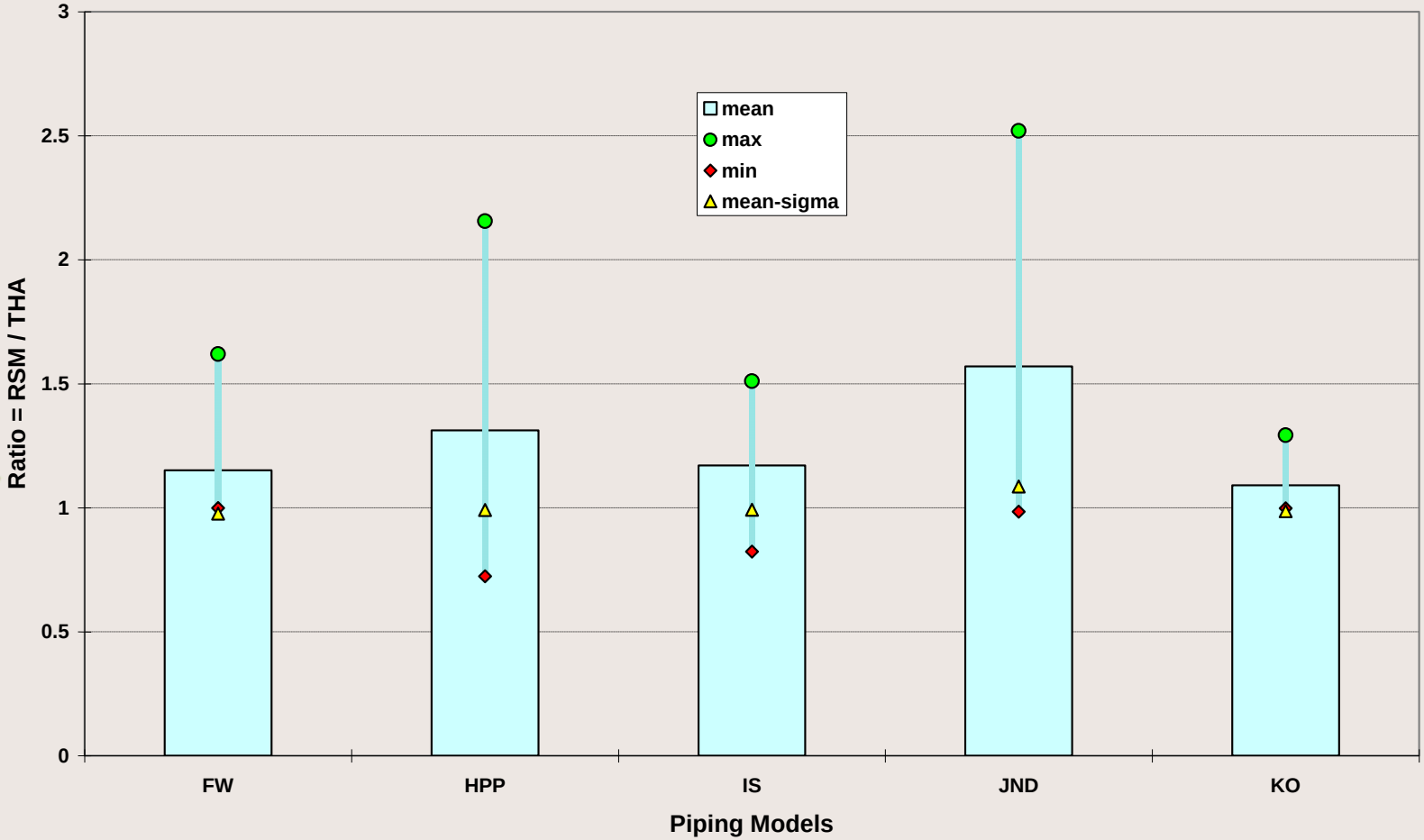

Displacements

Statistical processing of analysis results

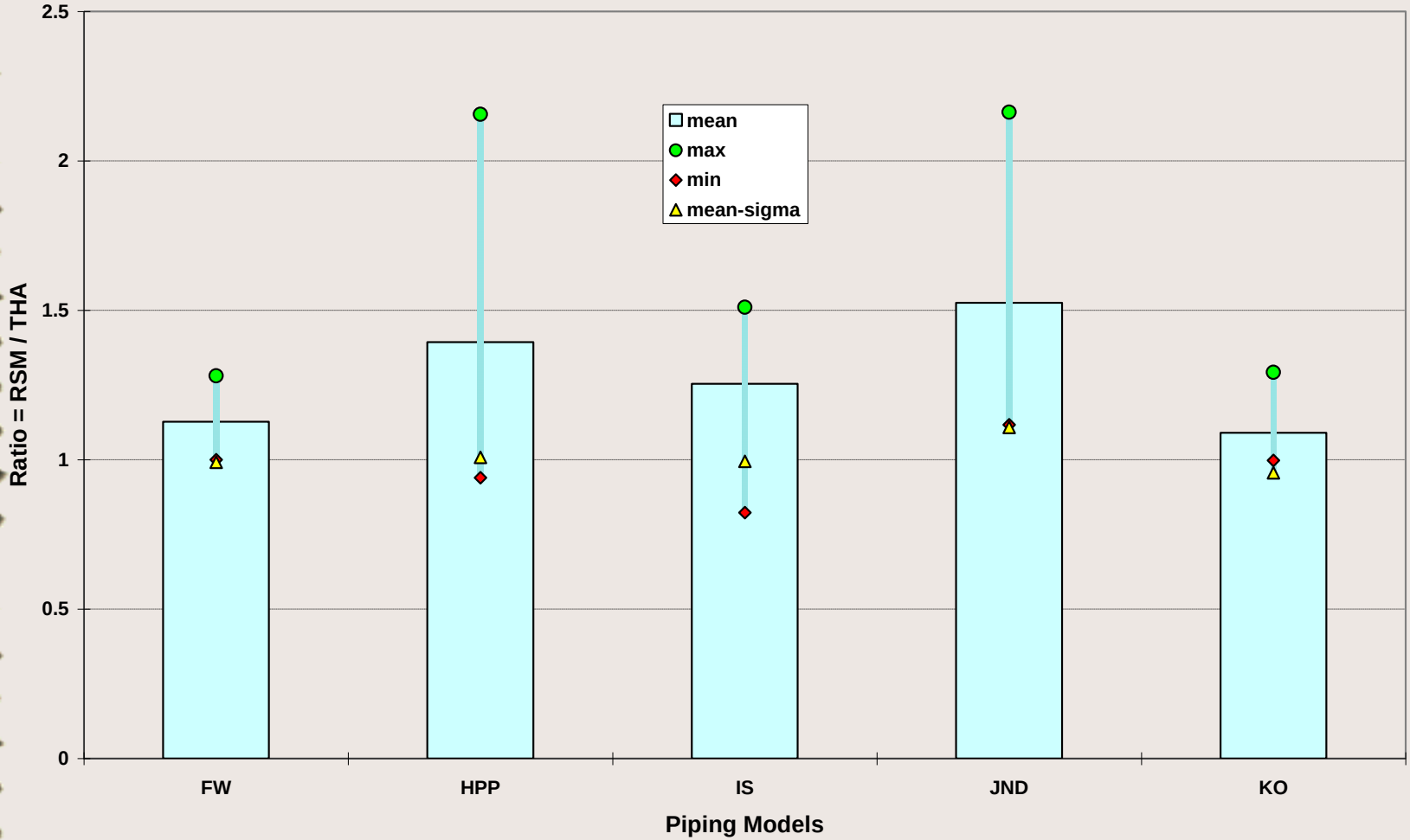

Moments

Statistical processing of analysis results

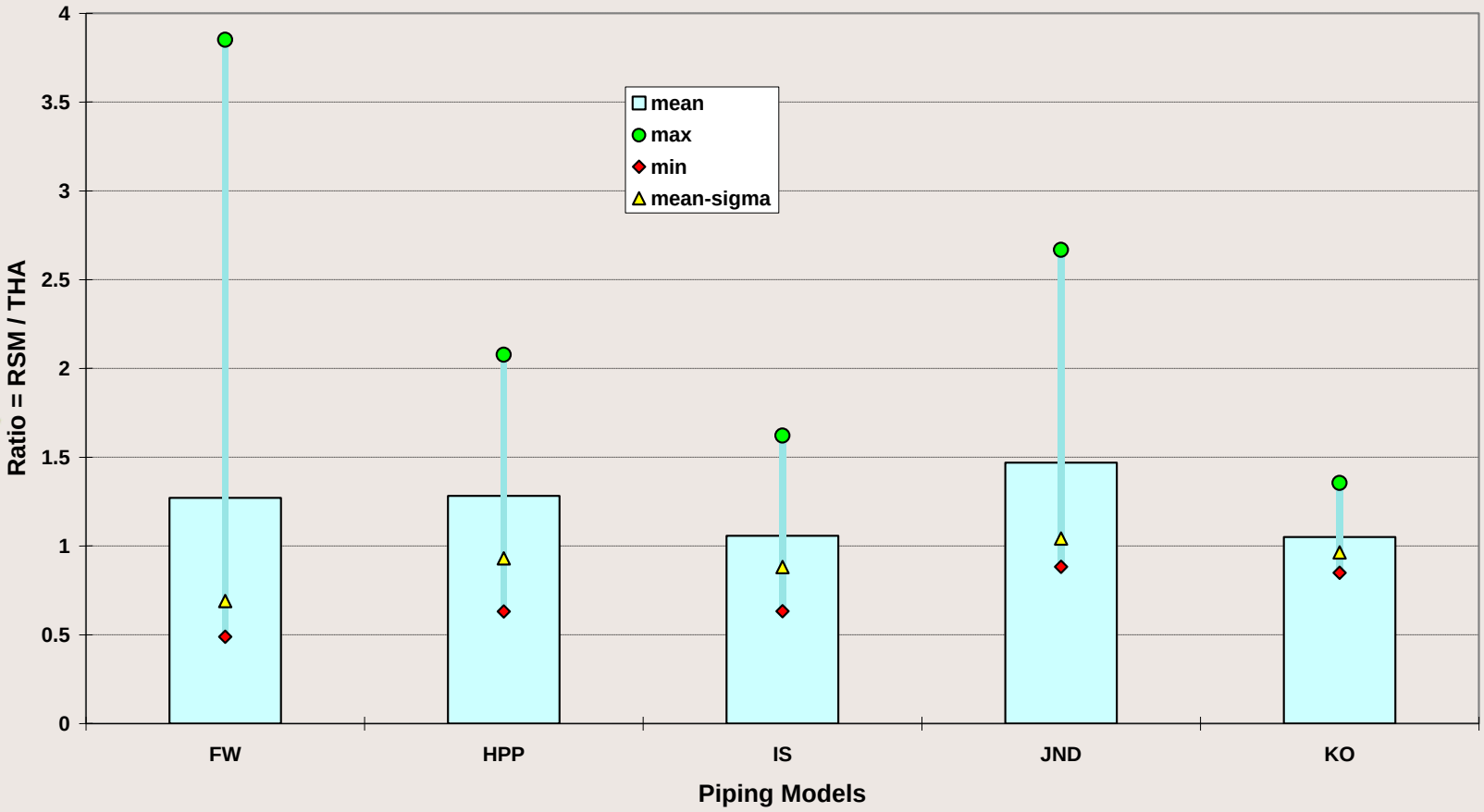

Support's reactions

Sample of seismic analysis of NPP piping with use of different types of seismic restraining

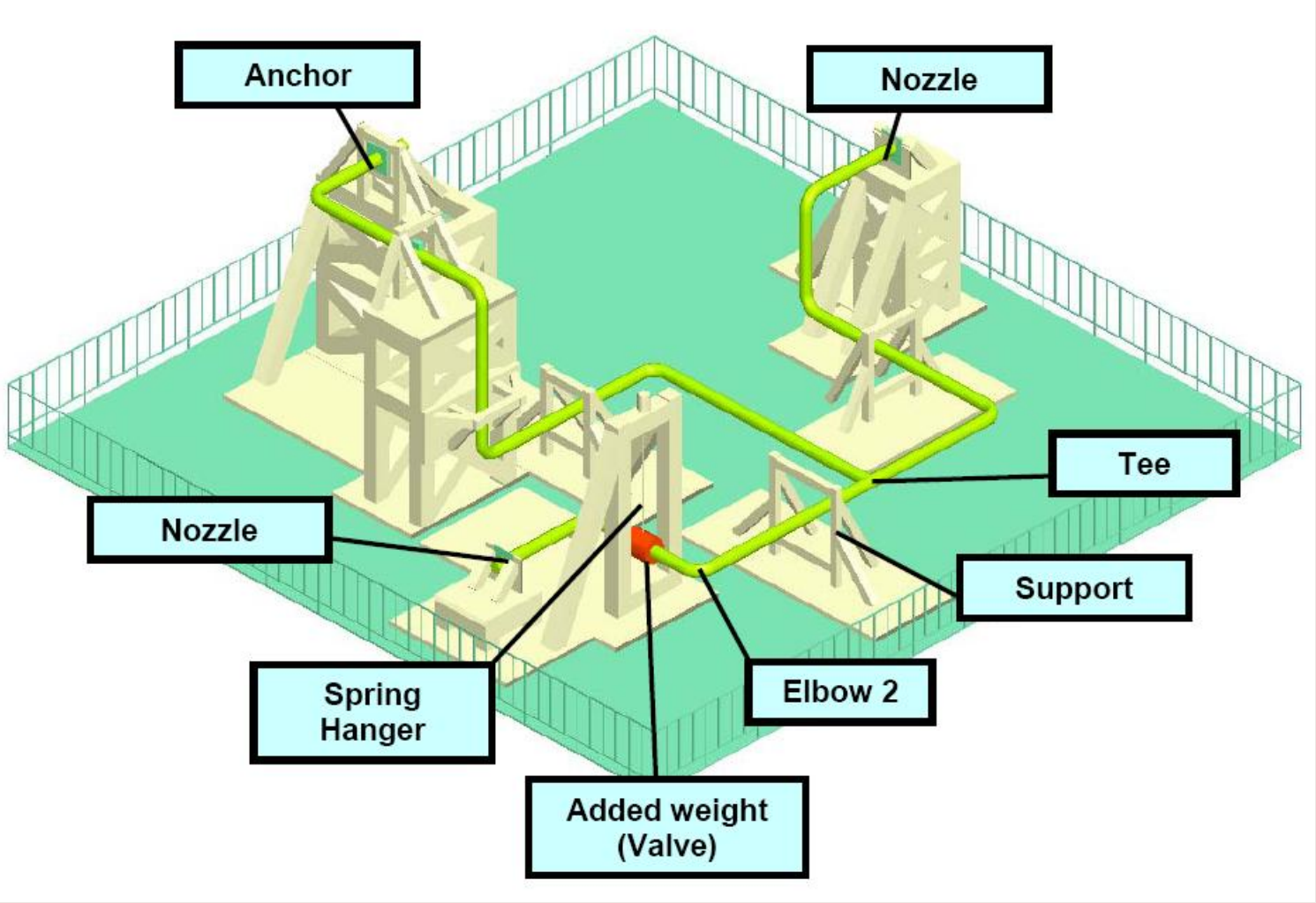

Prototype (NUREG/CR-6983)

Sample of seismic analysis of NPP piping with use of different types of seismic restraining

Prototype (NUREG/CR-6983)

Sample of seismic analysis of NPP piping with use of different types of seismic restraining

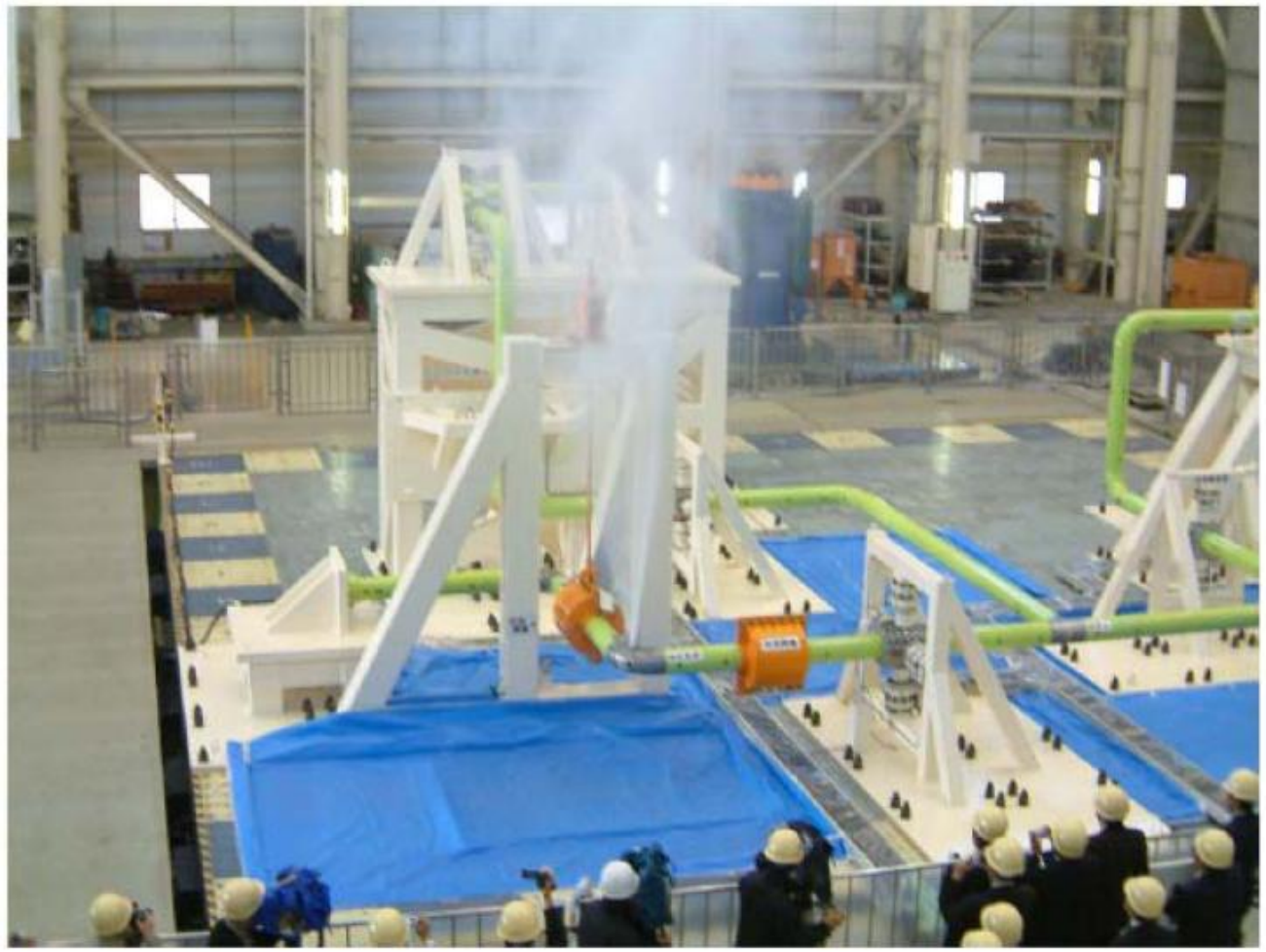

Prototype (NUREG/CR-6983)

Sample of seismic analysis of NPP piping with use of different types of seismic restraining

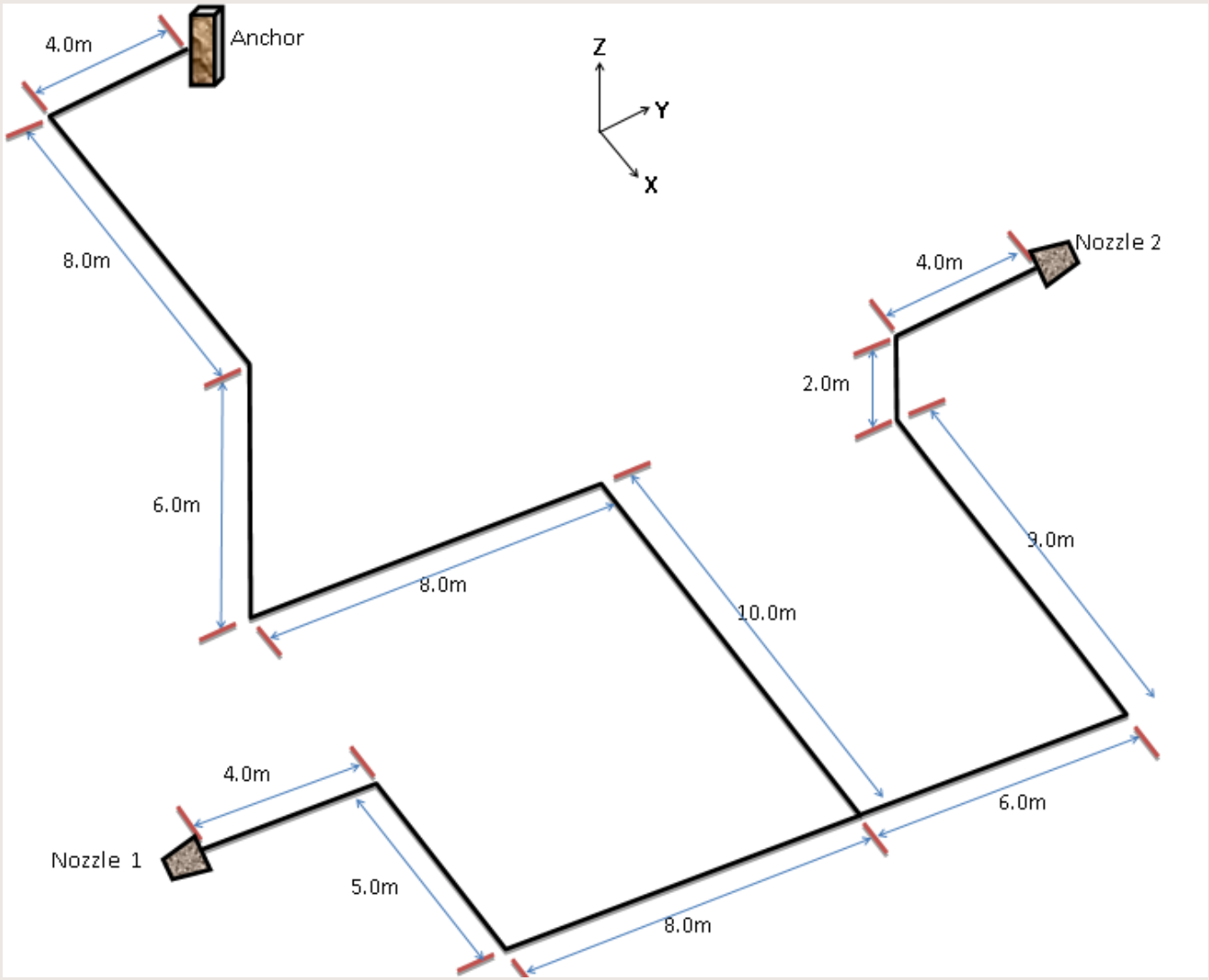

Sample of seismic analysis of NPP piping with use of different types of seismic restraining

Input Data for Analyses

It is assumed that the piping is fabricated from the standard pipes and fittings, corresponding to 2" Pipe Schedule 40. Piping material is a carbon steel SA-106, Grade B, used for seamless pipes.

Parameter	Value
Outside diameter	60.325 mm
Wall Thickness	3.912 mm
Linear Material weight	0.0533 N/mm
Linear weight of the medium (water)	0.0213 N/mm
Linear weight of insulation	0.025 N/mm
Bend Radii (1.5 D)	76.2 mm
Installation temperature	10°C
Design Temperature	350°C
Design Pressure	13.8 MPa

Sample of seismic analysis of NPP piping with use of different types of seismic restraining

Input Data for Analysis

T, °C	α (mm/mm/°C)*10^{-5}	T, °C	E, MPa	T,°C	Sy, MPa	T,°C	St, MPa
21	1.15	21	202700	-29	241	-29	414
38	1.17	93	198600	38	241	38	414
66	1.19	149	195100	66	227	93	414
93	1.21	204	192400	93	221	149	414
121	1.22	260	188200	121	217	204	414
149	1.24	316	182700	149	214	260	414
177	1.26	371	175800	204	206	316	414
204	1.28			260	197	343	414
232	1.3			316	185	371	414
260	1.31			343	179		
288	1.31			371	173		
316	1.33						
343	1.35						
371	1.37						

Sample of seismic analysis of NPP piping with use of different types of seismic restraining

Seismic Input

Seismic input was defined in the form of the generic broadband floor response spectrum. The excitation is considered as uniform for each of the spatial directions. For purposes of the actual evaluation three levels of seismic excitation are considered: low, moderate and high. Each level of excitation was obtained by multiplying the spectrum acceleration on the coefficients 1, 2 and 3, respectively.

Three artificial accelerograms were generated for the use in the frame of Time History Analysis. Duration of each record is 20 sec, time step is 0.01 sec.

For an equivalent static method a seismic input was defined in the form of the distributed inertial load applied for each spatial direction. Load vector was calculated as a product of peak spectrum acceleration amplified on the coefficient of 1.5 times the piping mass. Then, combined seismic response was obtained by SRSS rule.

Sample of seismic analysis of NPP piping with use of different types of seismic restraining

Seismic Input.

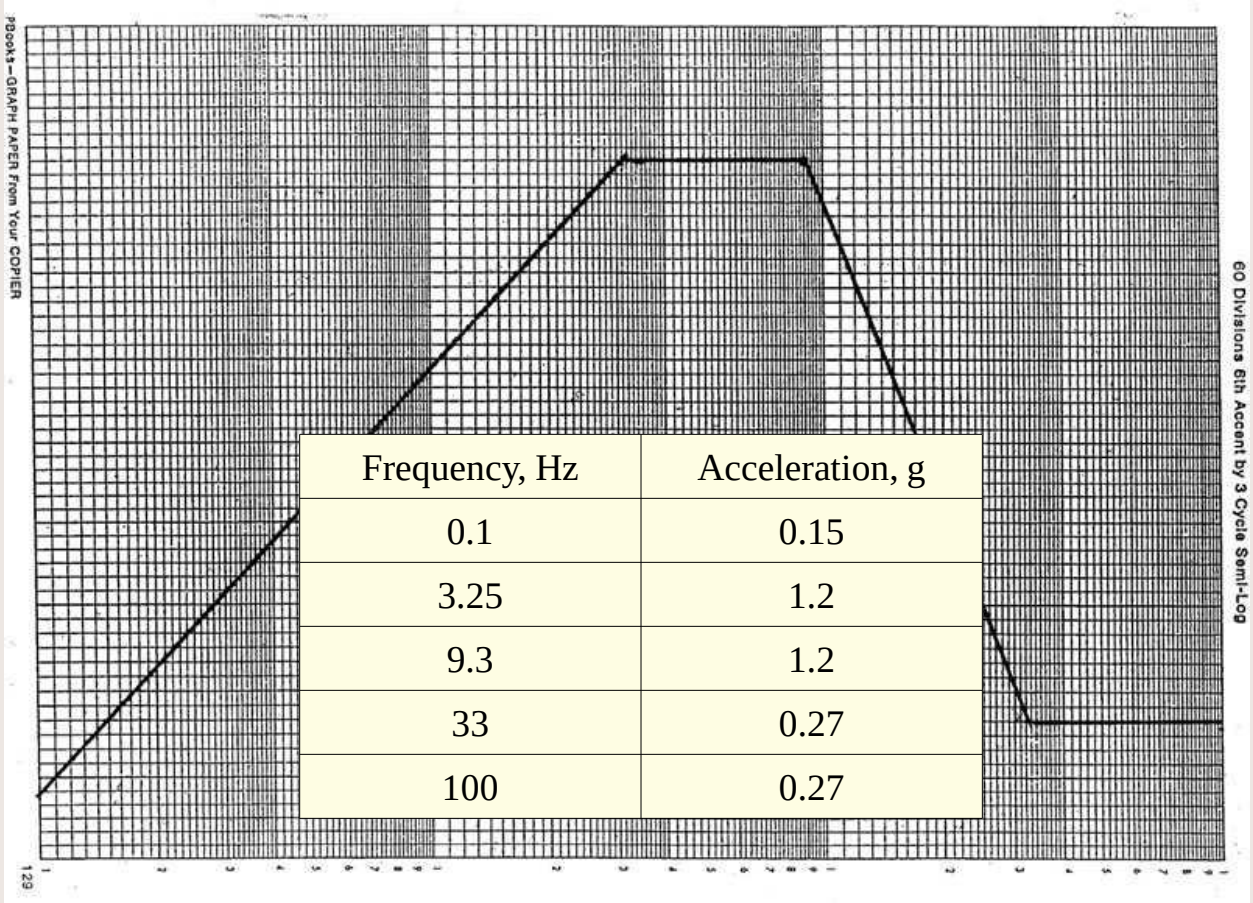

Frequency, Hz	Acceleration, g
0.1	0.15
3.25	1.2
9.3	1.2
33	0.27
100	0.27

Input Floor Response Spectra (damping 5%).

Sample of seismic analysis of NPP piping with use of different types of seismic restraining

Seismic Input

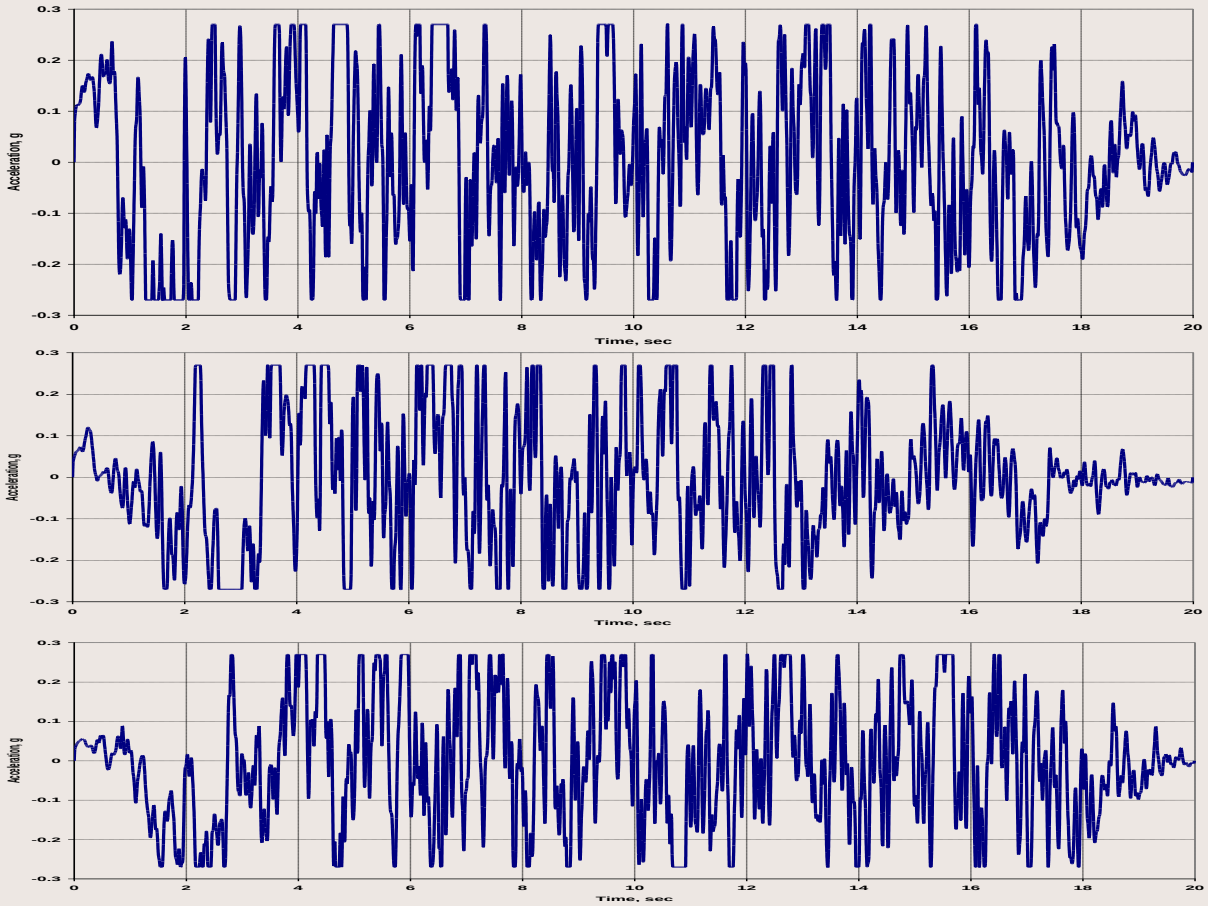

X

Y

Z

Sample of seismic analysis of NPP piping with use of different types of seismic restraining

Seismic Input

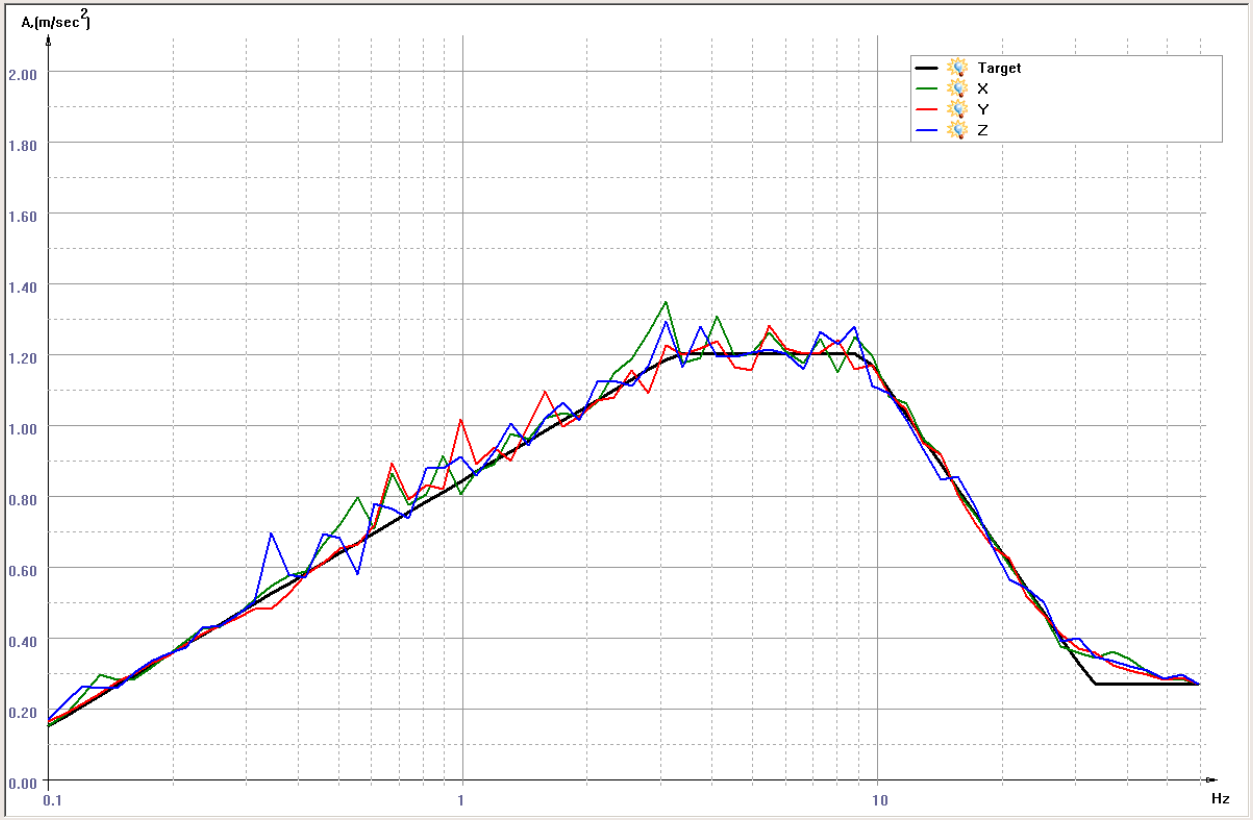

Comparison of target and calculated response spectra

Sample of seismic analysis of NPP piping with use of different types of seismic restraining

Сейсмическое воздействие.

Direction	Time step, sec	Number of points	Cross-correlation coefficients	
X	0.01	2000	Kxy	0.11
Y			Kxz	0.03
Z			Kyz	0.02

Parameters and files of artificial accelerograms.

Sample of seismic analysis of NPP piping with use of different types of seismic restraining

Static Analysis.

On the first stage of analysis weight supports were located along the line. On the horizontal parts of piping a sliding supports with friction coefficient 0.3 were placed. On the vertical pipe sections a spring hangers were installed to carry weight load and compensate thermal expansion as well. The distance between weight supports was defined according to the recommendations of revised Table NF-3611-1 and was assessed to be equal 6 m.:

2010 SECTION III, DIVISION 1 — NF

TABLE NF-3611-1
SUGGESTED PIPING SUPPORT SPACING

Nominal Pipe Size, in. (DN)	Suggested Maximum Span, ft (m)	
	Water Service	Steam, Gas, or Air Service
1 (25)	7 (2.1)	9 (2.7)
2 (50)	10 (3.0)	13 (3.9)
3 (80)	12 (3.6)	15 (4.5)
4 (100)	14 (4.2)	17 (5.1)
6 (150)	17 (5.1)	21 (6.4)
8 (200)	19 (5.7)	24 (7.3)
12 (300)	23 (7.0)	30 (9.1)
16 (400)	27 (8.2)	35 (10.6)
20 (500)	30 (9.1)	39 (11.8)
24 (600)	32 (9.7)	42 (12.8)

GENERAL NOTES:

(a) Suggested maximum spacing between piping supports for horizontal straight runs of standard and heavier piping with a maximum operating temperature of 750°F (400°C).

(b) Does not apply where span calculations are made or where there are concentrated loads between supports such as flanges, valves, specialties, etc.

(c) The spacing is based on a maximum combined bending and shear stress of 1.5 ksi (10 MPa) and insulated piping filled with water or the equivalent weight of steel pipe for steam, gas, or air service, and the pitch of the line is such that a sag of 0.1 in. (2.5 mm) between supports is permissible.

Sample of seismic analysis of NPP piping with use of different types of seismic restraining

Static Analysis.

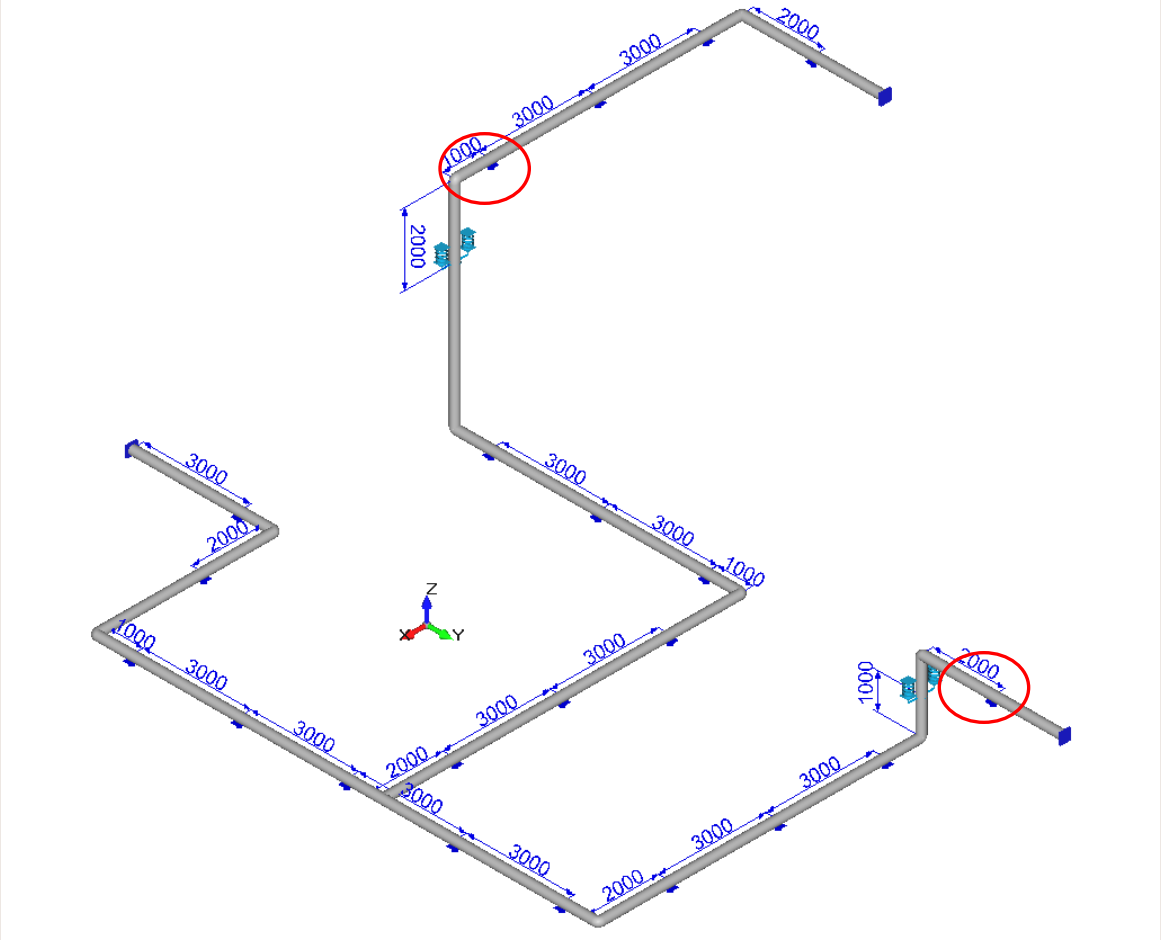

Location of weight supports (1)

Sample of seismic analysis of NPP piping with use of different types of seismic restraining

Static Analysis.

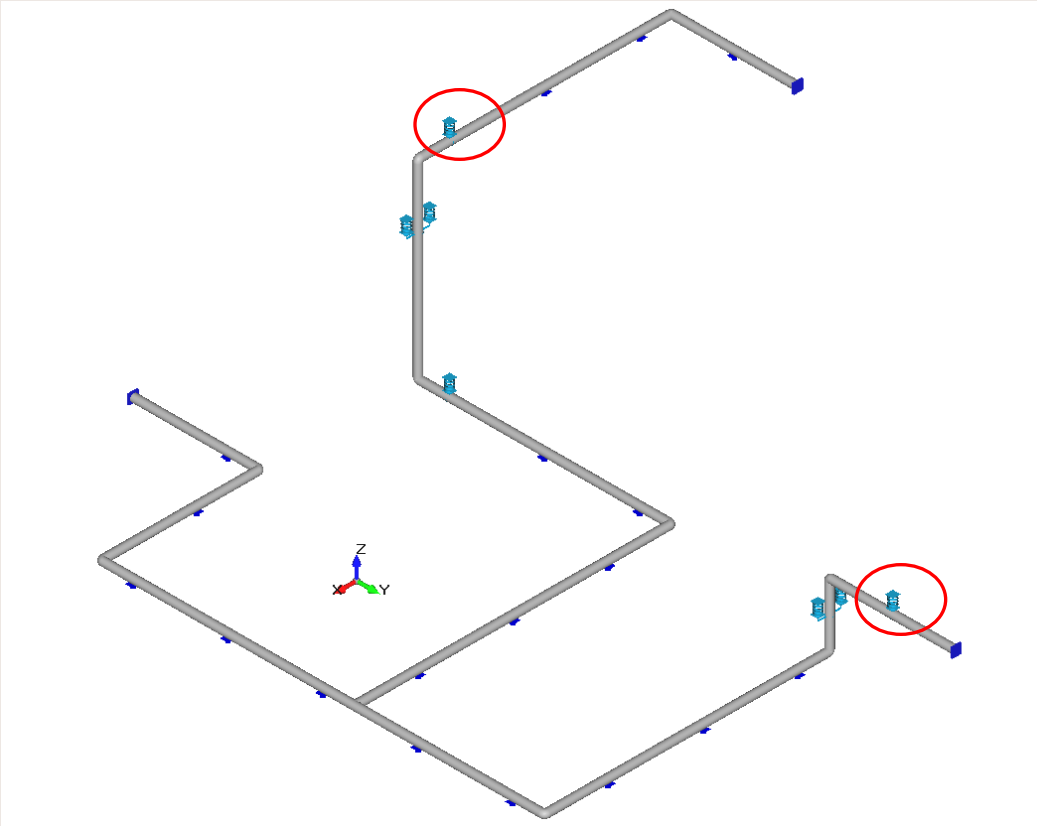

Location of weight supports (2)

Sample of seismic analysis of NPP piping with use of different types of seismic restraining

Results of static analyses.

Maximal stresses, Equation (8) - Design Cond.

элем.	узел1	узел2	расчет	допуск.	FS
PIPE	¤0000007	240	91	173	0.53
BEND	20	30	26	173	0.15
TEE	60		64	173	0.37

Maximal stresses, Equation (10) - Level A, B

элем.	узел1	узел2	расчет	допуск.	FS
PIPE	30	¤0000006	36	176	0.20
BEND	20	30	62	176	0.35
TEE	60		11	176	0.06

Sample of seismic analysis of NPP piping with use of different types of seismic restraining

Results of static analyses.

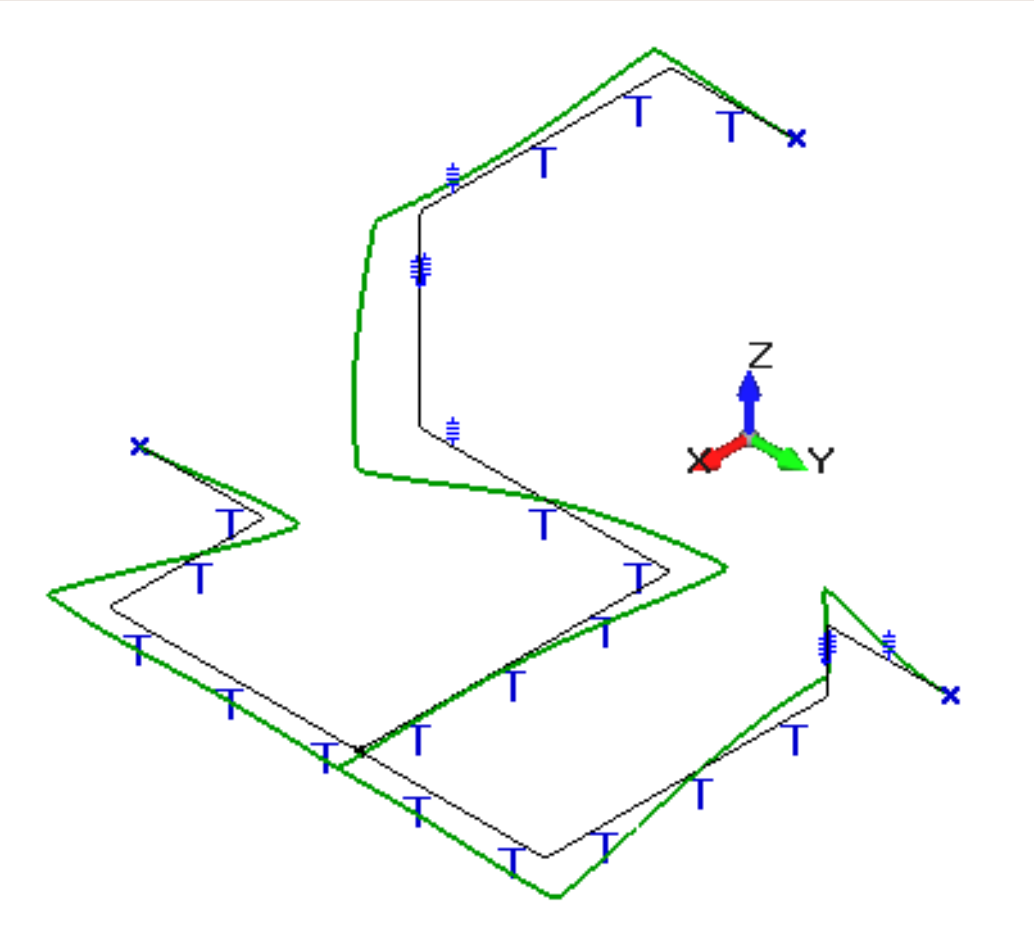

Thermal Expansion

Sample of seismic analysis of NPP piping with use of different types of seismic restraining

Three methods were considered for the seismic analysis of the considered piping:

- equivalent static load analysis (ESLA): seismic load is considered as a distributed inertial load and calculated by multiplying the mass of the pipe at the maximum spectral peak acceleration, multiplied by a factor of 1.5. The resulting load vector was applied to the system in three spatial directions, the overall response was obtained using the SRSS combination rule;
- response spectrum method (RSM): seismic response of the system is based on the modal analysis. Seismic input in that case is defined in terms of floor response spectra. Intermodal and spatial combination of seismic loads is realized with use of SRSS rule;
- time history analysis (THA): seismic response of the system is based on the modal integration of equations of motion of the piping system. Seismic input is defined as a three-component accelerograms. Maximum seismic response of the pipe is calculated at each integration step.

Sample of seismic analysis of NPP piping with use of different types of seismic restraining

To achieve seismic resistance the considered piping was restrained by means of additional supports. Analyses were performed within each of the three above methods. Three variants of restraints were considered:

1. "static" restraints, such as rod hangers and rigid struts or guides: these linear restraints limit piping movements in one direction. They are active under static as well as dynamic loads. In the frame of all above methods these restraints were modeled as one-dimensional rigid elements.
2. hydraulic snubbers (shock absorbers) selected from LISEGA catalogue. Snubbers are also one-directional restraints, but they are active only for dynamic loads, but not for static loads. Modeling of snubbers is realized by means of the spring elements with stiffness ratio taken from the Catalogue
3. high viscous dampers (HVD) manufactured by GERB company.

Sample of seismic analysis of NPP piping with use of different types of seismic restraining

The following seismic criteria were considered within performed analyses:

- check of stresses in piping elements according to the equation (9) , NC-3653.1 taking into account allowable values defined for Service Level D (NC-3655);
- check of support's reactions under normal operation conditions plus seismic loads. For spring hanger supports this criterion is defined as follow:

$$|P_{SSE}| + |P_{NOL}| < P_{MAX}$$

(prevention of the full compression of the spring)

Sample of seismic analysis of NPP piping with use of different types of seismic restraining

Summary of performed analyses. Demand to Capacity (D/C) Ratio

	Method: →	No seismic restraints			Type of restraining								
					"Static" supports[1)]			Snubbers			Dampers		
		ESLA	RSM	THA	ESLA	RSM	THA	ESLA	RSM	THA	ESLA	RSM	THA
excitation	Low	4.7	1.78	2.38	0.88	0.97	0.98	0.75	0.96	0.76	0.97	0.78	0.9
	Moderate	9.37	3.55	4.46	0.9	0.72	0.82	0.95	0.76	0.94	0.69	0.58	0.73
	High	14.03	5.31	6.55	0.84	0.99	0.96	0.92	0.92	0.99	0.93	0.85	0.9

Sample of seismic analysis of NPP piping with use of different types of seismic restraining

Number of additional supports required to achieve piping seismic resistance.

	Method: →	Type of restraining								
		"Static" supports[1)]			Snubbers			Dampers		
		ESLA	RSM	THA	ESLA	RSM	THA	ESLA	RSM	THA
excitation	Low	9	6	6	9	5	7	4	4	4
	Moderate	13	10	10	12	11	10	6	6	6
	High	15	10	12	17	15	11	6	6	7