# Nuclear District Heating Plans from Loviisa to Helsinki Metropolitan Area

Harri Tuomisto
Fortum, Finland

Joint NEA/IAEA Expert Workshop on the "Technical and Economic Assessment of Non-Electric Applications of Nuclear Energy“
OECD Headquarters, Paris, France , 4-5 April 2013,

# Contents

- Fortum
- Nuclear power in Finland
- Loviisa 3 CHP option
  - LWR plant modifications for CHP
  - District heat consumption
  - Heat transport systems
  - Economic considerations
  - Safety considerations

# Fortum is a Nordic energy company


**Power Division consists of Fortum's power generation, physical operation and trading as well as expert services for power producers.**

**Heat Division** consists of combined heat and power generation (CHP), district heating and cooling activities and business-to-business heating solutions.

**Russia Division** consists of power and heat generation and sales in Russia. It includes OAO Fortum and Fortum's slightly over 25% holding in TGC-1.

**Electricity Solutions and Distribution Division** is responsible for Fortum's electricity sales and distribution activities. It consists of two business areas: Distribution and Electricity Sales.

# Fortum's geographical presence today

Nr 1  Heat

Nr 1  Distribution

Nr 2  Electricity sales

Nr 3  Power generation

## Nordic countries

| | |
|---|---|
| Power generation | 52.3 TWh |
| Heat sales | 20.7 TWh |
| Distribution cust. | 1.6 million |
| Electricity cust. | 1.2 million |

## Key figures 2010

| | |
|---|---|
| Sales | EUR 6.3 bn |
| Operating profit | EUR 1.7 bn |
| Personnel | 10,600 |

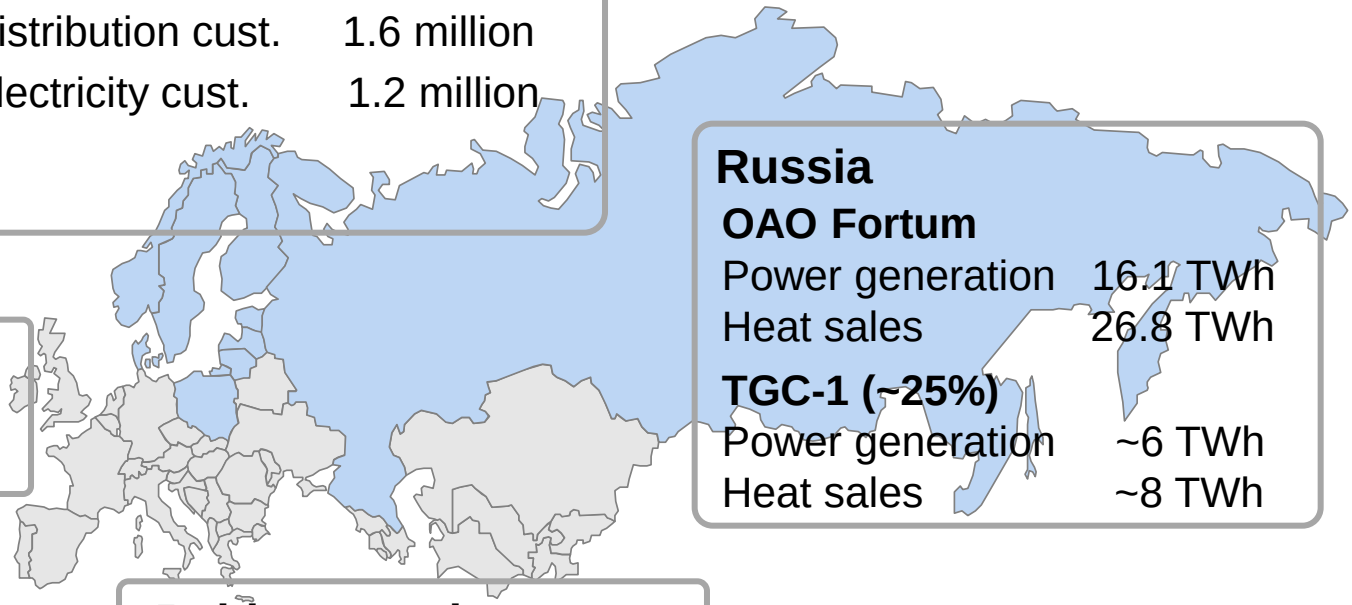

## Russia

**OAO Fortum**

| | |
|---|---|
| Power generation | 16.1 TWh |
| Heat sales | 26.8 TWh |

**TGC-1 (~25%)**

| | |
|---|---|
| Power generation | ~6 TWh |
| Heat sales | ~8 TWh |

## Poland

| | |
|---|---|
| Heat sales | 4.0 TWh |
| Electricity sales | 0.1 TWh |

## Baltic countries

| | |
|---|---|
| Heat sales | 1.4 TWh |
| Electricity sales | 0.3 TWh |
| Distribution cust. | ~24,000 |

# Power Division's production in the Nordic countries

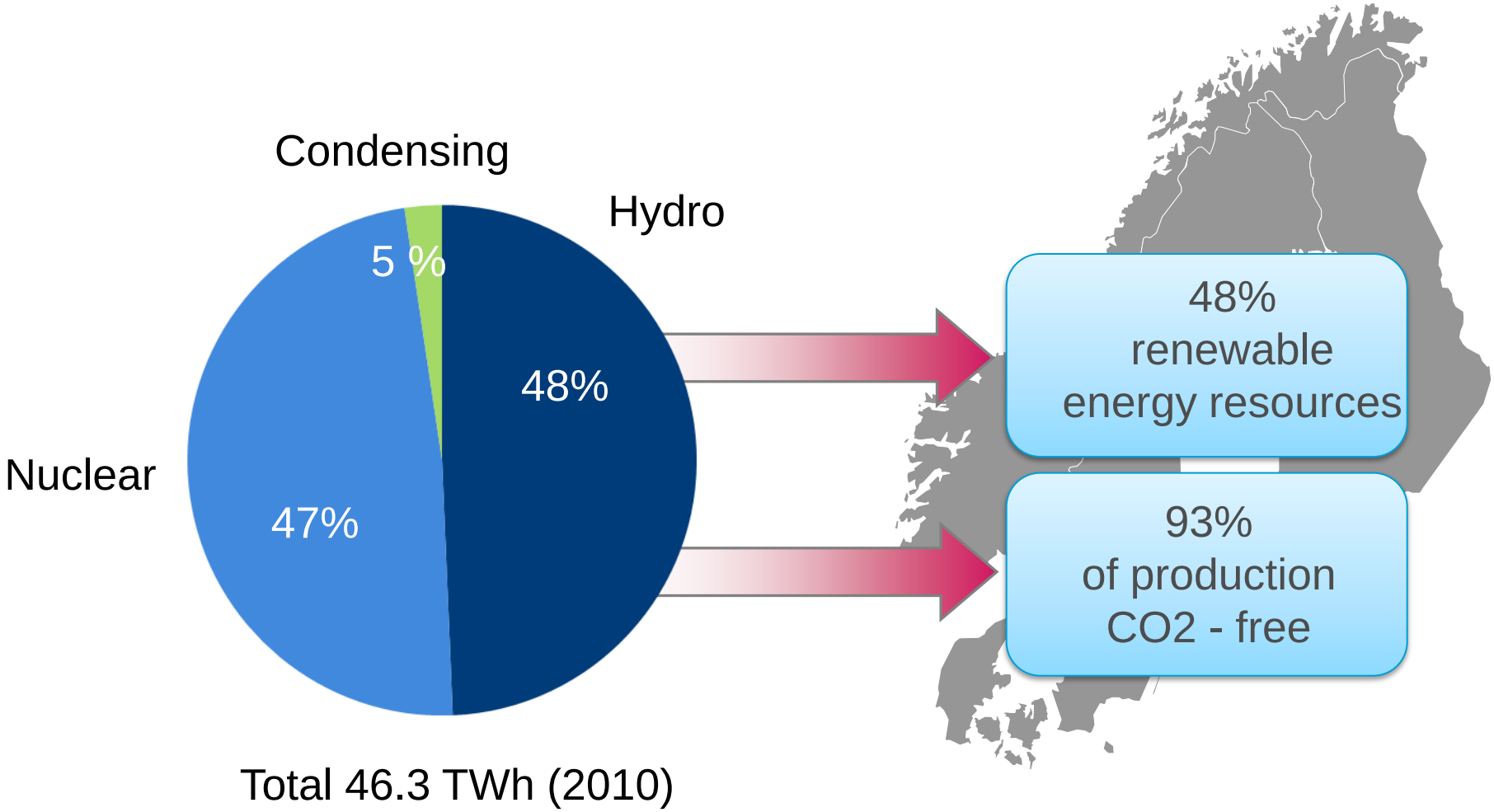

# Fortum's Nuclear power* capacity

- A fully-owned nuclear power plant in Loviisa
- Co-owned nuclear assets:
  - 25% interest in TVO's power plant units in Olkiluoto, Finland.
  - 23% interest in the Forsmark units, Sweden
  - 43% interest in the Oskarshamn units, Sweden

* Power capacity refers respectively to Fortum's shares of fully and jointly-owned power plants.

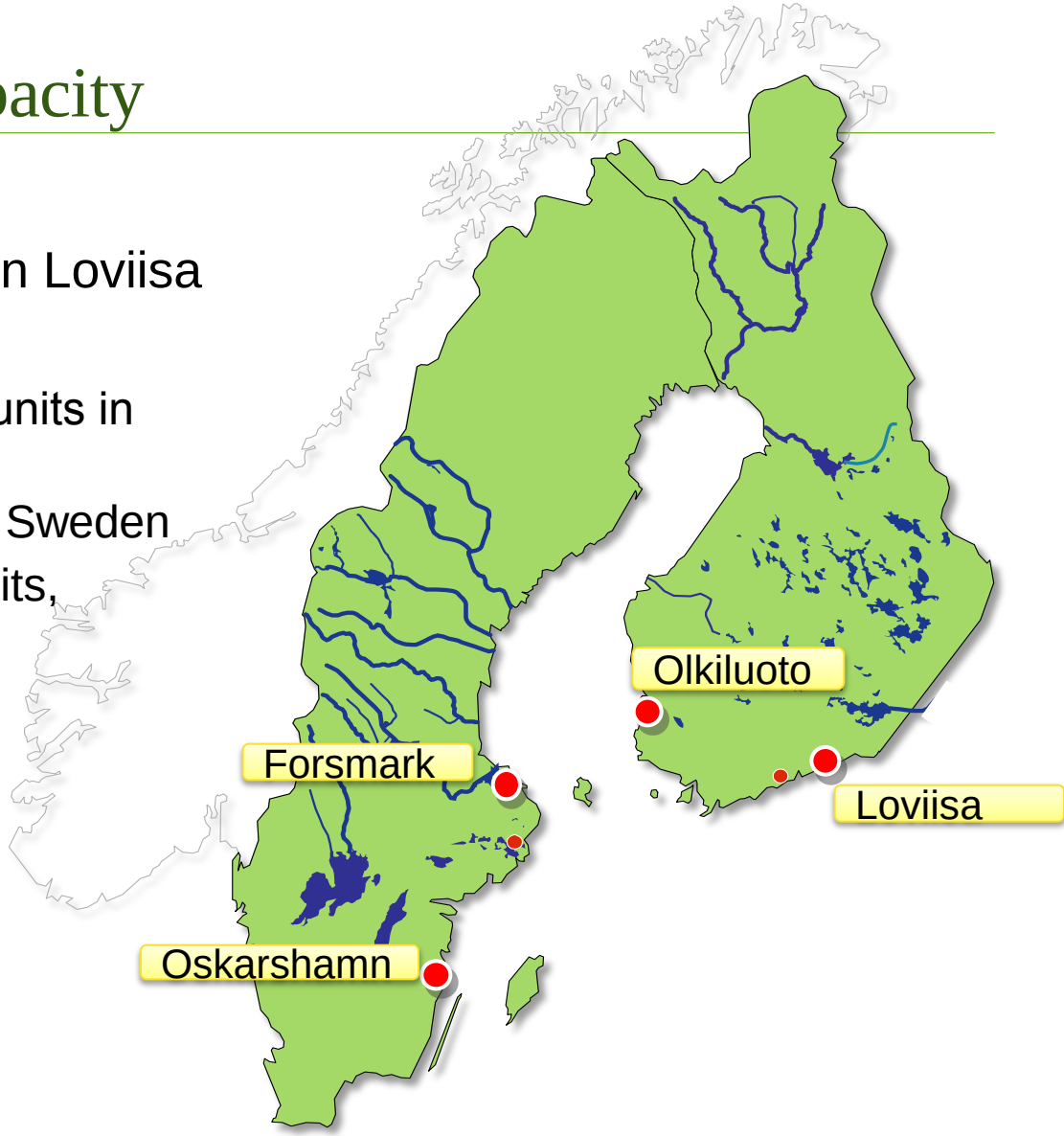

# Licensing Process of New Builds in Finland

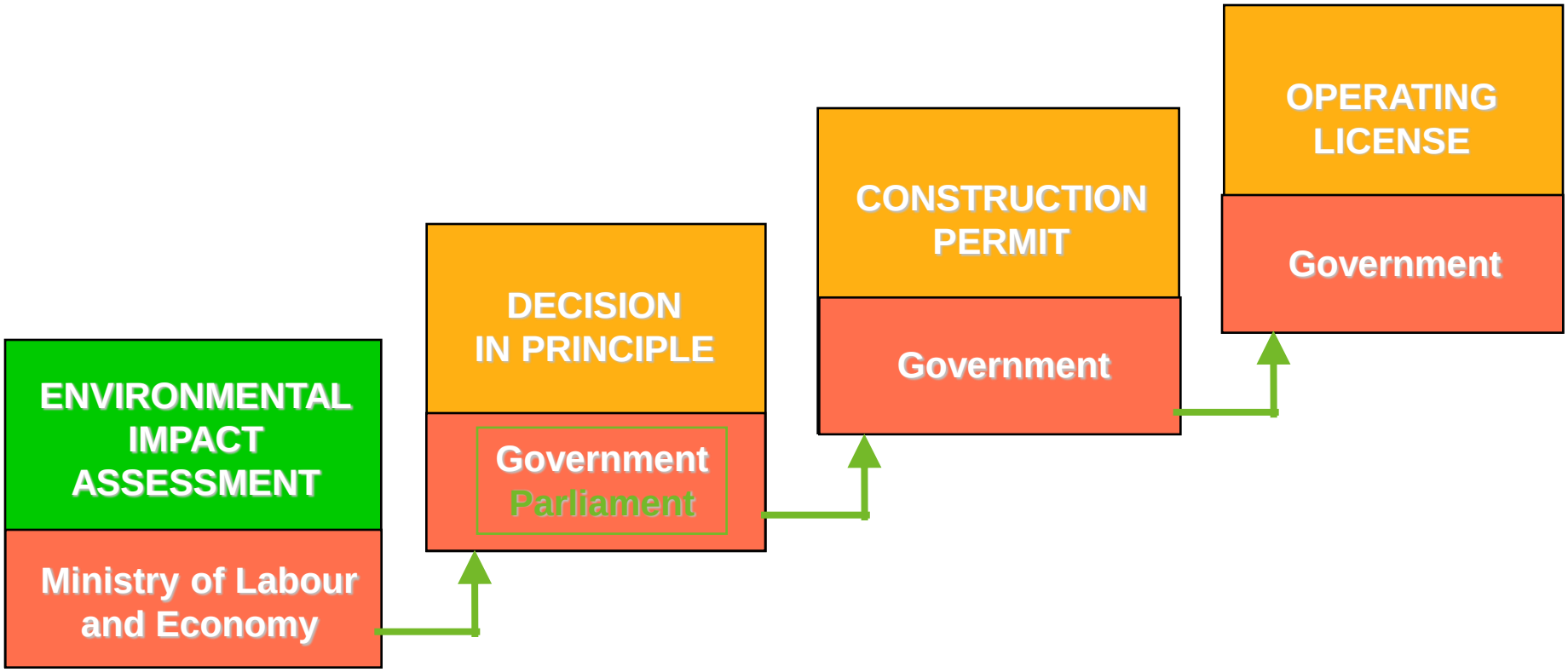

# Nuclear power facilities in Finland

## Loviisa NPP (Fortum)

- **Units 1, 2 - VVER 2x500 MW, start of operation in 1977 and 1980**
- **Unit 3: DiP not granted**

## Olkiluoto NPP (TVO)

- **Units 1, 2 - ABB BWR 2x850 MW, start of operation in 1978 and 1980**
- **Unit 3: EPR under construction**
- **Unit 4: DiP granted in 2010 ***

## Posiva (TVO 60%, Fortum 40%)

- disposal of the spent fuel at Olkiluoto site
- start operation in 2020
- Construction license application filed in December 2012

## Fennovoima

- **DiP granted for 1 new unit*, site selected in 2011 (Pyhäjoki in the Northern Finland)**

* Decisions-in-Principle granted by the Finnish Government in May 2010, ratified by the Finnish Parliament in July 2010

# Loviisa 3 CHP

Next slides introduce main findings from the studies
carried out by Fortum in 2008-2010
(similar study was already carried out at the beginning of 1980's )

## Option of combined heat and power production (CHP) from the Loviisa Unit 3

Heat would be transported to the Helsinki metropolitan area:
- distance from Loviisa NPP is about 80 km
- heat capacity up to 1000 MW

# Five reactor alternatives studied for DiP application





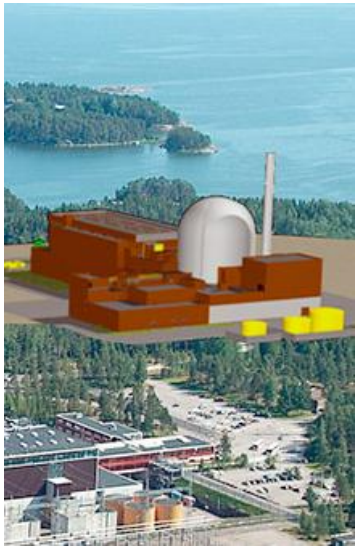

| ABWR | AES2006 | EPR | ESBWR | APR1400 |
|---|---|---|---|---|
| BWR | PWR | PWR | BWR | PWR |
| Toshiba-Westinghouse | Atomstroyexport | AREVA NP | General Electric Hitachi | Korea Hydro & Nuclear Power |
| Japan, Sweden | Russia | France-Germany | United States | South Korea |
| 1 600 MW | 1 200 MW | 1 700 MW | 1 650 MW | 1450 MW |

# PWR connection

Heat extraction from a Pressurized Water Reactor

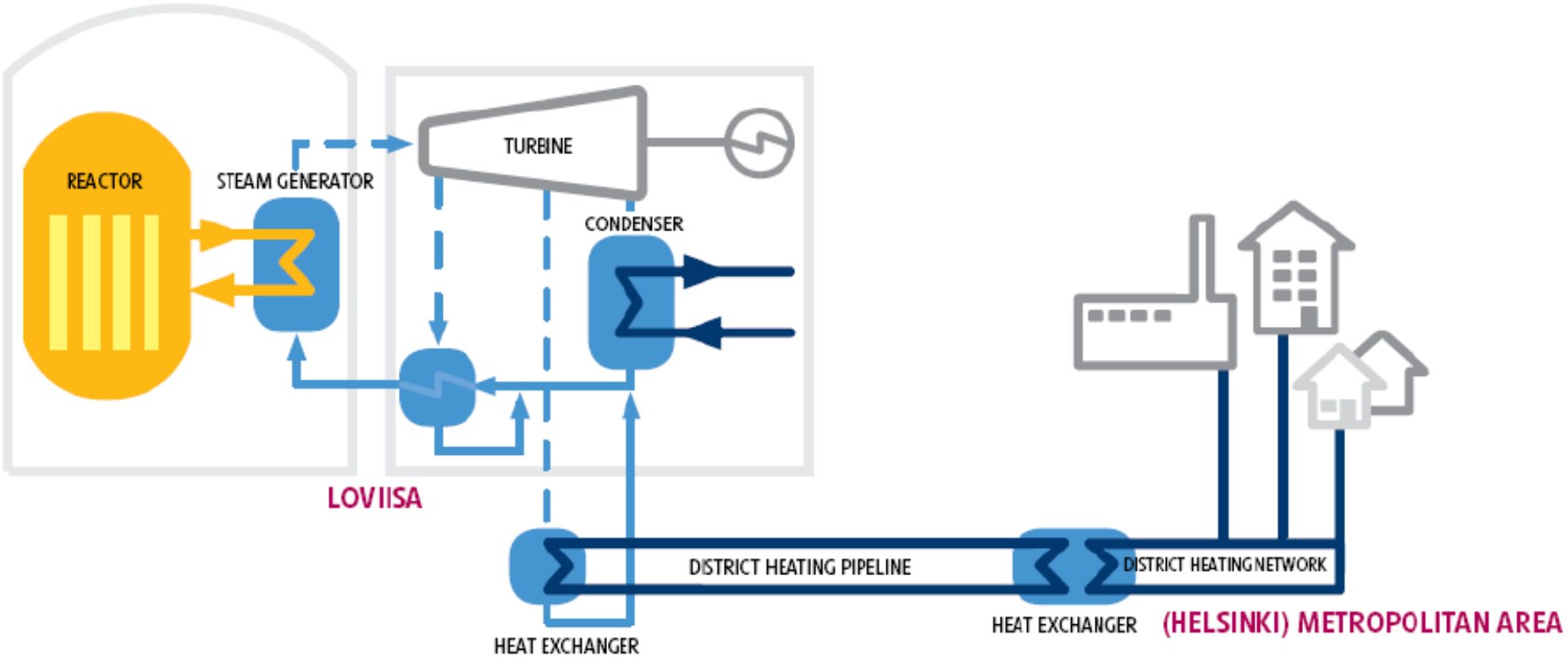

# BWR connection

Heat extraction from a Boiling Water Reactor

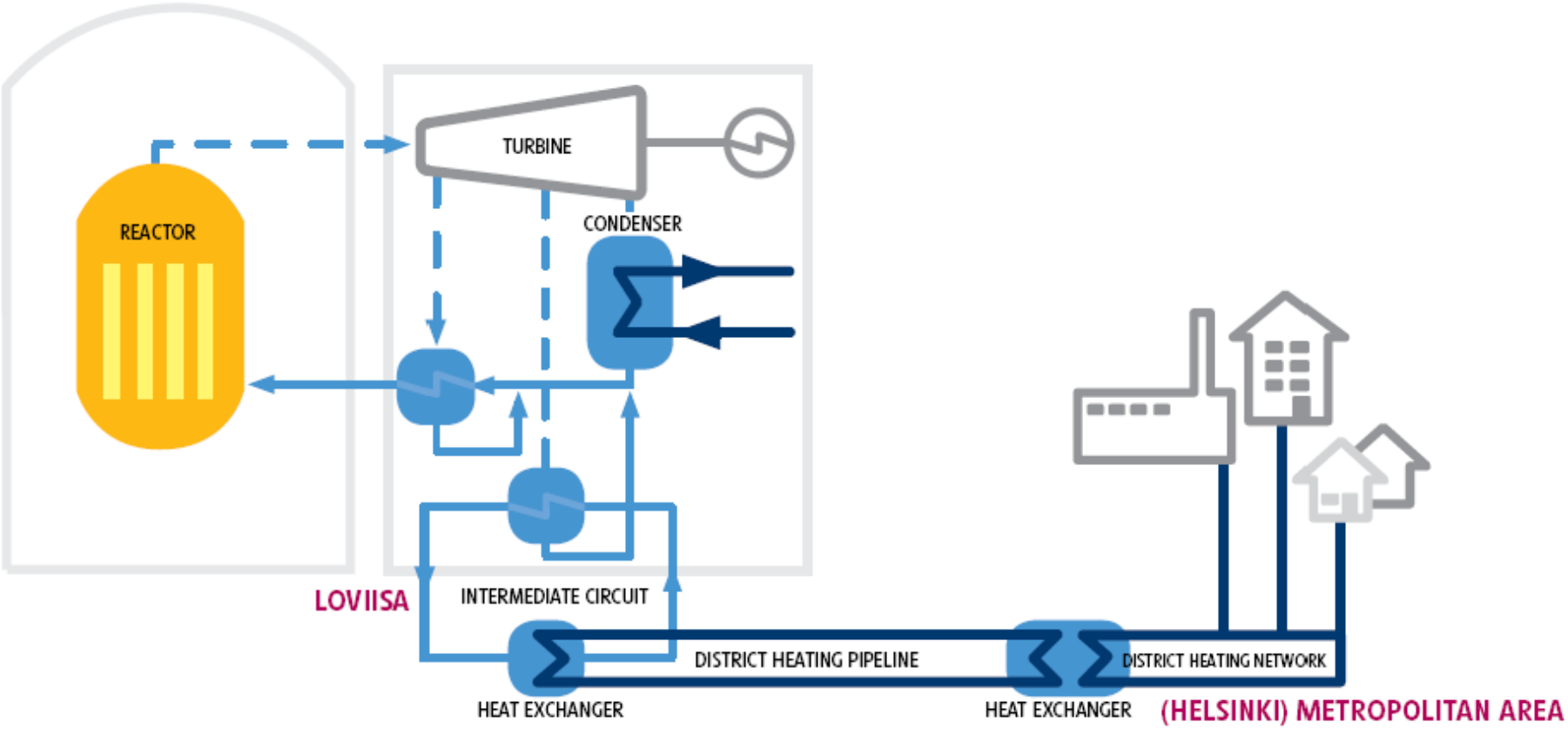

# Basis of the Loviisa 3 CHP option

- Replacement of heat generated with fossil fuels
  - thermal energy consumption (district heat) 11 - 12 TWh per year
- Large reduction of carbon dioxide emissions
  - up to 4 million tons annually (6 % of the entire $CO_2$ emissions in Finland)
- Higher plant efficiency
  - reduction of heat discharge to the Gulf of Finland
  - net electrical power loss approx. 1/6 of the thermal power generated
- Steam extraction from the turbine
  - before low-pressure turbines or several extractions from low-pressure turbines
  - optimisation, and redesign vs. design of new turbine

# Loviisa 3 CHP

**Cumulative probability distribution of heat generation power in Helsinki metropolitan area for 12 TWh annual generation**

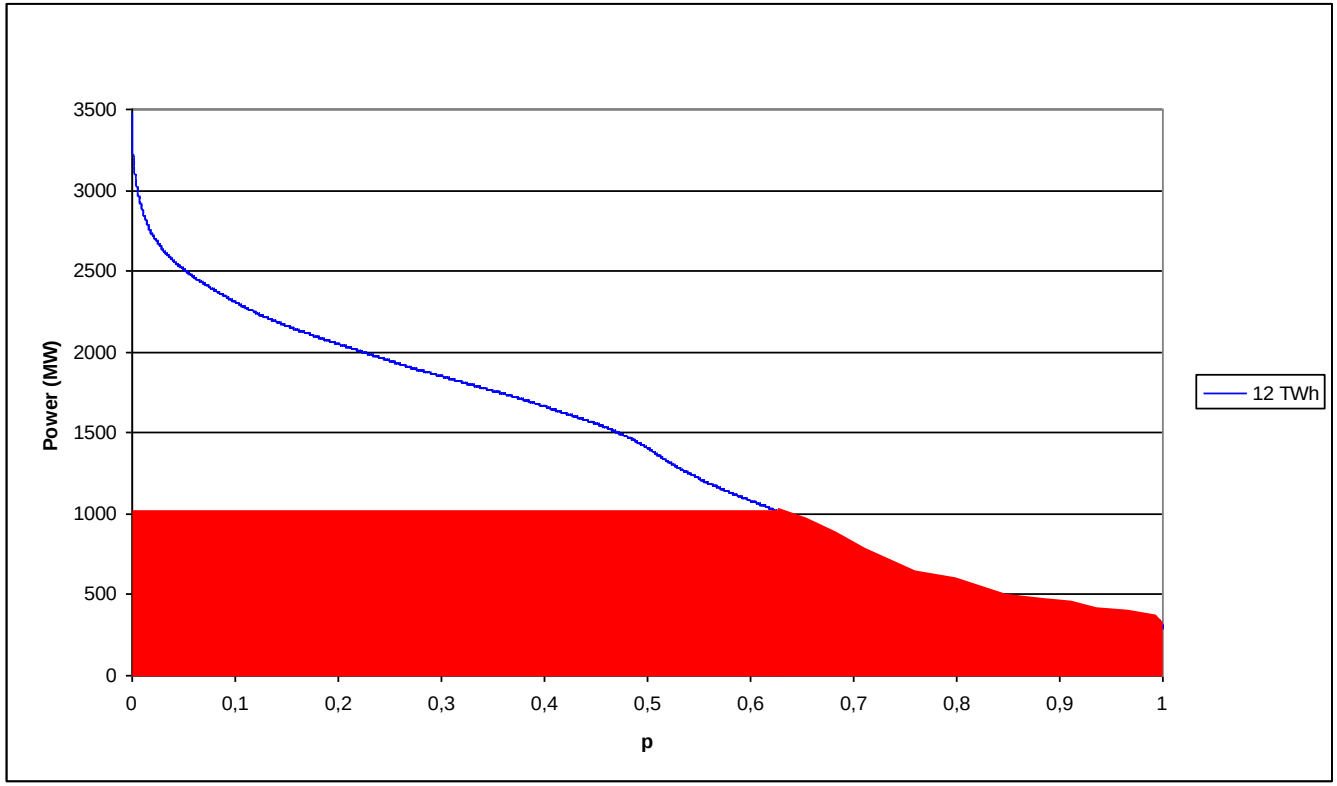

# District heating consumption in the Helsinki Metropolitan area

| Town | District heat consumption [GWh/a] | District heat operator |
|---|---|---|
| Helsinki | 7500 | Helsingin Energia |
| Espoo | 2500 | Fortum |
| Vantaa | 2000 | Vantaan Energia Oy (40% owned by Helsingin Energia) |

# CHP pipe routing from the Loviisa power plant to Helsinki: the distance is about 80 km

# Loviisa 3 CHP – technical data of heat transport system

- Distance over 75 km (Loviisa – eastern Helsinki)
  - 2 x Ø 1200 mm pipes, PN25 bar, Q = 4 - 5 $m^3/s$
  - 4 - 7 pumping stations
    - total pumping power needed tens of MWs
    - compensates for heat losses
  - Control scheme
    - district heat water temperature or flow rate
  - Heat accumulator needed, heat distribution to the local district heat network via heat exchangers

# Heat transport in pipes: Tunnel alternative

**Mounting in a rock tunnel**

- cross section 30 $m^2$
- stable conditions
- positive maintenance aspects

# Heat transport in pipes: Near-surface installation alternative

- **Near-surface installation**
  - lower costs
  - environmentally more challenging

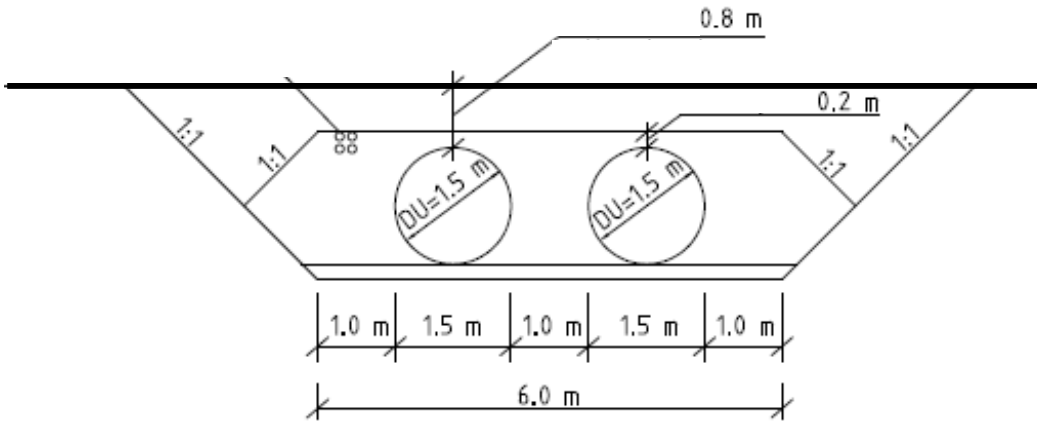

# Loviisa 3 CHP - district heat transport system

## Pressure balancing, valves and pumps

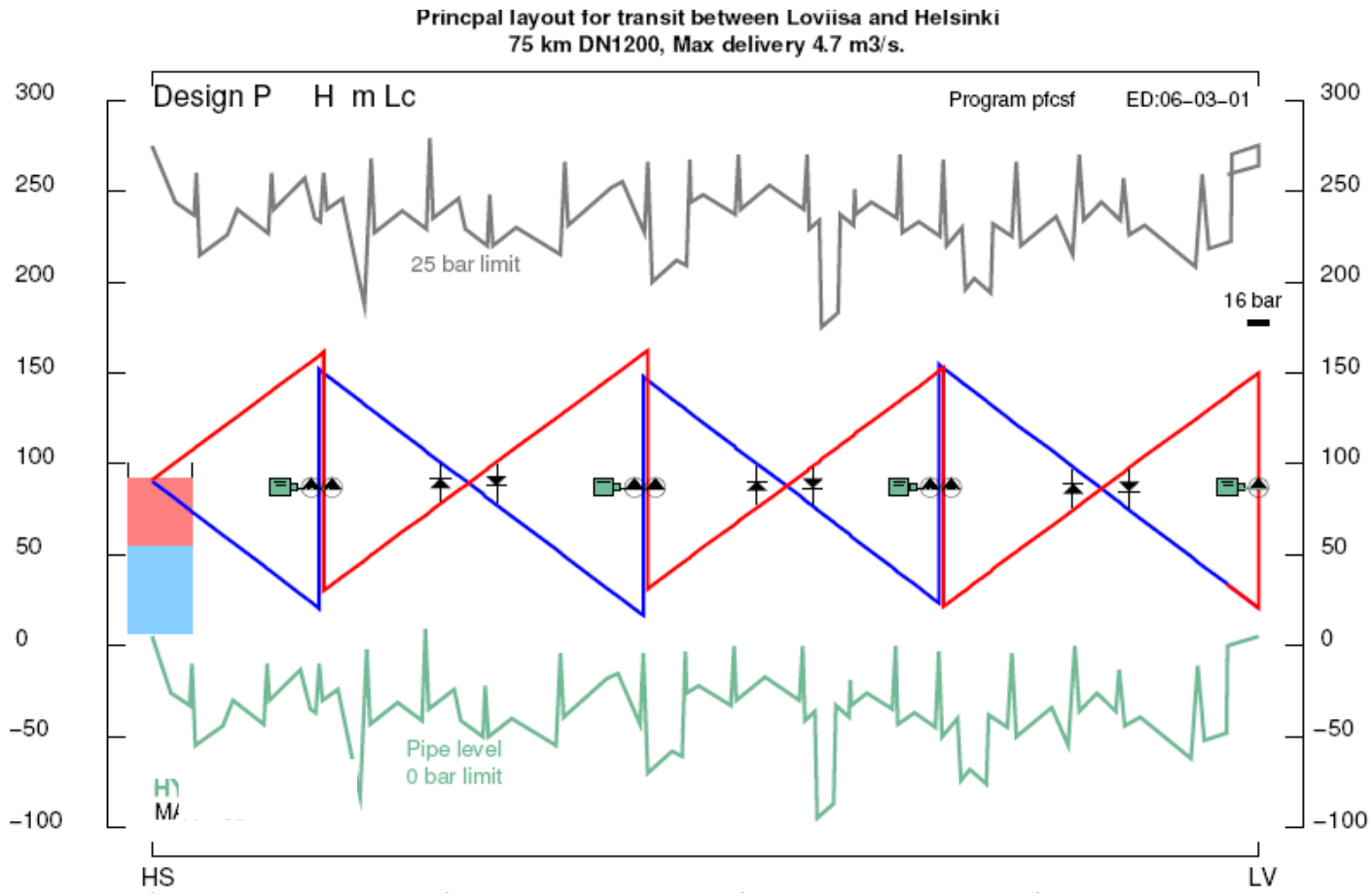

# Further options: Heat transport by sea

- with ships


*This kind of ships could be employed as hot water tank carriers for the sea transport*

- or pusher barges

- requires a lot of new infrastructure: harbors and hot water transfer systems

# Economic considerations

**Main costs to be estimated:**

- Value of the lost power production
  - Lost electric power is ~1/6 of the extracted heat
- Investment costs related to turbine modification and heat exchanger system on-site
- Heat transport system
  - Investment costs,
  - Operating costs
- System costs related to the heat distribution network
  - Modifications to heat network
  - Need for heat accumulator
  - Reserve heating plants in case of unavailability of nuclear heat supply

# Application of nuclear design principles for CHP (1)

## General design requirement

”The cogeneration plant shall be designed to prevent transport of any radioactive material from the nuclear plant to district heating units under any condition of normal operation, anticipated operational occurrences, design basis accidents and selected severe accidents.”

## Additional safety requirements

- The heat generation design solutions have to be such that they will not increase safety risks of the NPP
- The heat transport system should not pose unacceptable safety hazards to the population and environment

# Application of nuclear design principles for CHP (2)

## Design of a NPP for the combined heat and power production

Coping with the design requirements:

**General design requirement**

- The heat ectraction takes place via heat exchangers and intermediate circuits
- The PWR case: heat exchangers at the NPP site and at the connection to city district heating network
- The BWR case: additionally an on-site intermediate circuit is foreseen

# Loviisa 3 CHP – safety analyses

## Additional safety requirements:

### Risks from the CHP connection to the overall plant safety

- Application of advanced accident analysis method to show that there are no consequences from the heat transport system transients to the plant safety
  - APROS, integrated model of the whole plant and the heat transport system

### Safety risks related to heat transport system

- Implementation of the heat transport piping in the tunnel:
  - Analysis of the consequences of the heat transport pipe leakages (with the APROS)

# Summary

- Finland has a good experience of deploying nuclear power > 30 years
- Commitment to using fission nuclear power with light water reactor continues at least for the next 60-70 years
- One new NPP unit is under construction, and granted DiP for two more units
- Fortum has studied options for nuclear CHP to Helsinki area, and included it to Loviisa 3 DiP application
- Different heat transport alternatives were included in the study
- Economics of the nuclear CHP depends strongly both on the heat transport costs and the system costs of the district heating network
- There are no identified significant nuclear or radiation safety risks related to the CHP operation